SEISMIC BRACKET INSTALLATION

Note: Review of design-build projects and conformity to local building codes must be verified by a registered design professional.

These instructions are for installing seismic restraints onto a Zero Zone display case. The installer is responsible for purchasing the correct bolts/fasteners from Hilti.

Seismic Bracket and Wire Rope Anchoring

These instructions apply to Zero Zone models:

Case Type	Model Number
Reveal	▪ ORMC(75-80) ▪ ORMC(80-82) ▪ ORMC(82-87) ▪ ORMC(83-88)
Highlight	▪ RHMC30 ▪ RHLC30 ▪ RHCC24
Crystal	▪ RVMC24 ▪ RVMC30 ▪ RVLC30

ZERO ZONE SEISMIC INSTALLATION REQUIREMENTS

Zero Zone Case models require seismic anchoring using a front bracket. The front bracket installs through the base as seen in **Figure 6 on Page 4**. A rear Rope Anchor Kit assembled on both sides as shown in **Figure 10 on Page 7.** Additionally, the rear wall of the unit comes with a factory-installed Seismic Rear Mount Installation Kit.



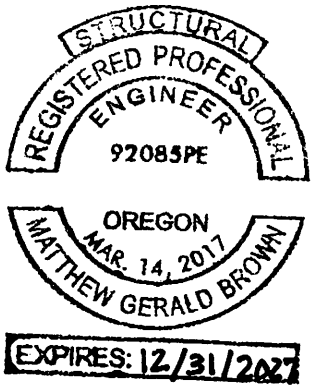

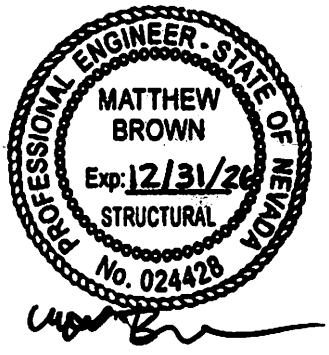



Matthew Brown

Digitally signed by Matthew Brown
DN: C=US, E=MattB@NewportSD.com, O="Newport Structural Design, Inc.", CN=Matthew Brown
Date: 2026.11.19 10:34:42-08'00'

ZERO ZONE, INC. • 800-247-4496 • ZERO-ZONE.COM
© 2026 Zero Zone, Inc. All Rights Reserved. • NOV 2026

66-0180 REV D

SEISMIC BRACKET INSTALLATION

Determining the Anchor Method for the Geographic Location

Anchor requirements for the installation location shall be determined based on the site's seismic risk classification. This will need to be done before the installation of any standard or back-to-back display case. Visit www.seismicmaps.org and use the following steps to determine the site's seismic risk classification:

1. In the Reference drop down menu, choose ASCE 7-22.
2. Set the Site Class as "Default." The Risk Category may be ignored.
3. Enter the installation address and press Enter or click Go.
4. The S_{DS} value is declared in the resulting table (See **Figure 1 on page 2**).
5. Compare the S_{DS} value to the charts on the following pages to determine the required anchors.

FIGURE 1: S_{DS} Value Example

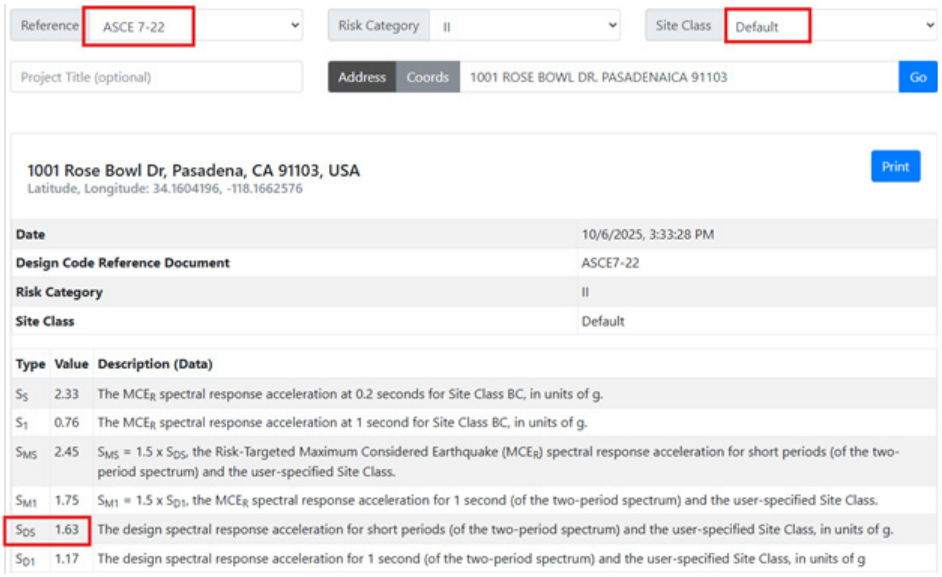

ZERO ZONE, INC. • 800-247-4496 • ZERO-ZONE.COM
© 2026 Zero Zone, Inc. All Rights Reserved. • NOV 2026
66-0180 REV D

SEISMIC BRACKET INSTALLATION

TABLE 1: S_{DS} Value Anchor Selection - Standard Bases up to 5 ½" Height

S_{DS}	Case Style RHLC30/T BB, RHMC30/T BB One Bar Each End, Four
≤ 1.3	No Anchors Required
≤ 1.9	Anchors Req'd (any slab thickness)
> 1.9	Need to verify Slab is at least 5" thick. Anchors Req'd

Single door cases should always be installed standalone.

Single door cases receive 1 rear anchor.

S_{DS}	Case Style: 6ORMC, 8ORMC, 12ORMC	**3-6 Door:** RVMC24	**Single Door:** RHLC30/T, RHMC30/T	**2 Door:** RHCC24, RHLC30/T, RHMC30/T, RVLC30, RVMC30	**2 Door Narrow:** 2RVMC24, 4ORMC	**3-6 Door:** RHCC24	**3-6 Door:** RHLC30/T, RHMC30T	**3-5 Door:** RVLC30, RVMC30	S_{DS}
	Front Anchors: 2 Brackets per Case Unless Otherwise Noted								
	Rear Anchors: 2 Cables per case (Top Corners) except 1 Cable @ Single Door Case								
≤ 0.7	No Anchors Required		No Anchors Required						≤ 0.7
≤ 0.8									≤ 0.8
≤ 0.9									≤ 0.9
≤ 1.0			Front and Rear Anchors (any slab thickness)	Front and Rear Anchors (any slab thickness)	Front and Rear Anchors (any slab thickness)	Front and Rear Anchors (any slab thickness)	Front and Rear Anchors (any slab thickness)	Front and Rear Anchors (any slab thickness)	≤ 1.0
≤ 1.1	Front and Rear Anchors (any slab thickness)								≤ 1.1
≤ 1.2						Need to verify Slab is at least 5" Thick. Front and Rear Anchors			≤ 1.2
≤ 1.3	Need to verify Slab is at least 5" Thick. Front and Rear Anchors						Need to verify Slab is at least 5" Thick. Front and Rear Anchors		≤ 1.3
≤ 1.4									≤ 1.4
≤ 1.5								Need to verify Slab is at least 5" Thick. Front and Rear Anchors	≤ 1.5
≤ 1.6									≤ 1.6
≤ 1.7						Need to verify Slab is at least 6" Thick. Front and Rear Anchors			≤ 1.7
≤ 1.8	Need to verify Slab is at least 6" Thick. Front and Rear Anchors						Need to verify Slab is at least 6" Thick. Front and Rear Anchors		≤ 1.8
≤ 1.9					Need to verify Slab is at least 5" Thick. Front and Rear Anchors				≤ 1.9
≤ 2.0				Need to verify Slab is at least 5" Thick. Front and Rear Anchors					≤ 2.0
≤ 2.1						Site Specific Engineering Required. Case Brackets may not be strong enough			≤ 2.1
≤ 2.2	Site Specific Engineering Required. Case Brackets may not be strong enough								≤ 2.2
≤ 2.3					Need to verify Slab is at least 6" Thick. Front and Rear Anchors				≤ 2.3
≤ 2.4									≤ 2.4
≥ 2.4			Site Specific Engineering Required. Case Brackets may not be strong enough						≥ 2.4

Installation for Standard Cases

Note: Reference Seismic Bracket Assembly drawing 173-0439.

1. Determine if the High Seismic or Standard Seismic Anchor Layouts are required (See Table 1 or **Figure 5**).
2. Prepare the floor for anchor installation.
   2.1. Mark the location of the case lineup on the floor according to the store layout, using hole locations shown in **Figure 8 on Page 5** and **Figure 9 on Page 6**.
3. Drill the anchor holes.
   3.1. Check Hilti's specifications at www.hilti.com for the correct anchor type, hole depth, and diameter.
   3.2. Embedment shall be in accordance with **Table 2**, using Hilti HIT-RE500 V3 two-part epoxy. All installation shall follow the manufacturer's instructions for hole preparation.

FIGURE 2: Rear Wall Mount Installation Kit Factory Installed

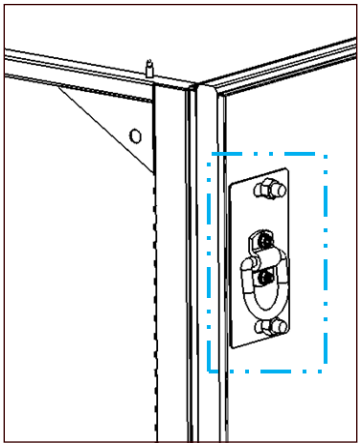

ZERO ZONE, INC. • 800-247-4496 • ZERO-ZONE.COM
© 2026 Zero Zone, Inc. All Rights Reserved. • NOV 2026

66-0180 REV D

SEISMIC BRACKET INSTALLATION

3.3. Drill holes according to these specifications.

4. Install the Front Seismic Anchor Brackets.

4.1. Position brackets as shown in **Figure 8 on Page 5** and **Figure 9 on Page 6**. One Seismic Anchor shall be installed at the:

- Left and right end bases on 2-door and 4 ft. display cases
- Right end base and center base on 3-door, 4-door, 6 ft., and 8ft. display cases
- Right end base and third base from the right on 5-door, 6-door, and 12 ft. display cases

4.2. Ensure the front-end Seismic Anchor Bracket position is consistent throughout the lineup.

4.3. Ensure the drainpipe is away from the anchors when installing the Front Seismic Anchor Bracket (See Figure 4).

5. Install the rear-floor D-Rings.

5.1. Leave 5" between rows of single display cases placed back-to-back for an air gap (**See Figure 12 on Page 8**).

5.2. Leave 5" between single display cases and the wall for an air gap (**See Figure 13 on Page 8**).

5.3. All installation shall follow the manufacturer's instructions for adhesive application and curing. Consult Hilti for the most current information.

5.4. Epoxy the ⅜" threaded rods into the holes and tighten the D-Rings to the floor with the washer and nuts provided (See Figure 5).

5.5. Epoxy the ½" threaded rods into the front hole location. Loosely attach the front bracket to the floor with the ½" nut and washer provided (See Figure 6).

Note: The unit must be a minimum of 2' away from the wall to allow proper access to the D-Rings during Seismic Wire Rope installation.

6. Loosely install the Seismic Wire Rope.

6.1. Loop the Seismic Wire Rope through both D-Rings (top and bottom). Secure the Seismic Wire Rope's excess length to the top of the ceiling with tape (See Figure 7 and See Figure 10).

Note: The seismic rope lock fitting indicates the Seismic Wire Rope entry and exit points, only allowing movement upward. The Seismic Wire Rope end leading to the top of the display case must pass through the upward side of the Seismic Rope Lock. The Seismic Wire Rope end leading to the D-Ring on the floor must pass through the downward side .

TABLE 2: Minimum Anchor Embedment	
Rod Length	**Embedment**
6"	2 ¾" minimum embedment in 4" or unknown slab
6"	3 ¾" minimum embedment into verified slab ≥ 5" but less than 6"
6"	4 ¾" minimum embedment into verified slab ≥ 6"
Note: Extra Protruding rod may be left or cut down if desired.	

FIGURE 3: Floor Anchors

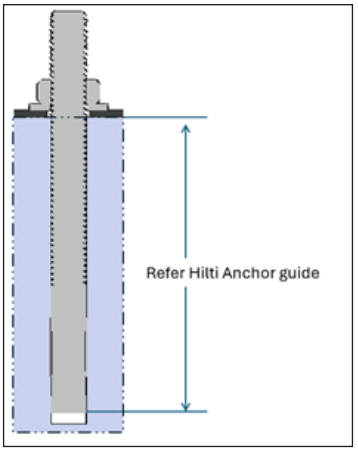

FIGURE 4: Drain Pipe Orientation

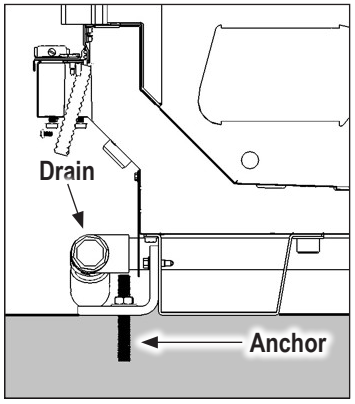

FIGURE 5: Floor Rear D-Ring Installation Kit

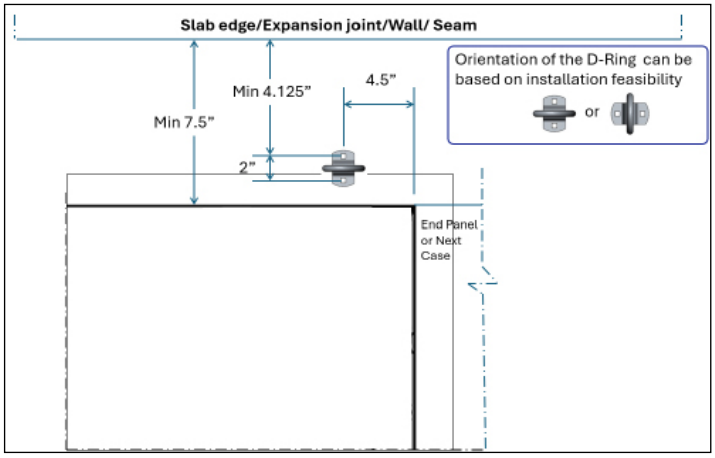

FIGURE 6: Floor Front Seismic Bracket Installation Kit

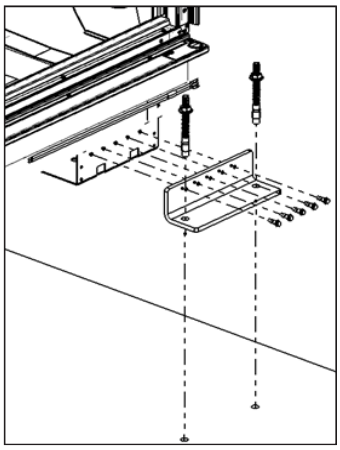

FIGURE 7: D-Ring and Wire Loop

View from right-end

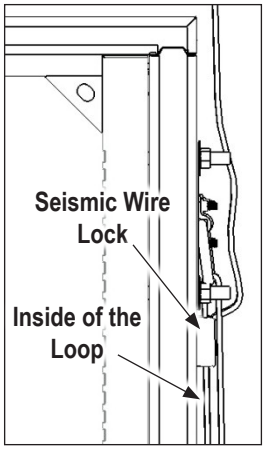

ZERO ZONE, INC. • 800-247-4496 • ZERO-ZONE.COM
© 2026 Zero Zone, Inc. All Rights Reserved. • NOV 2026

66-0180 REV D

SEISMIC BRACKET INSTALLATION

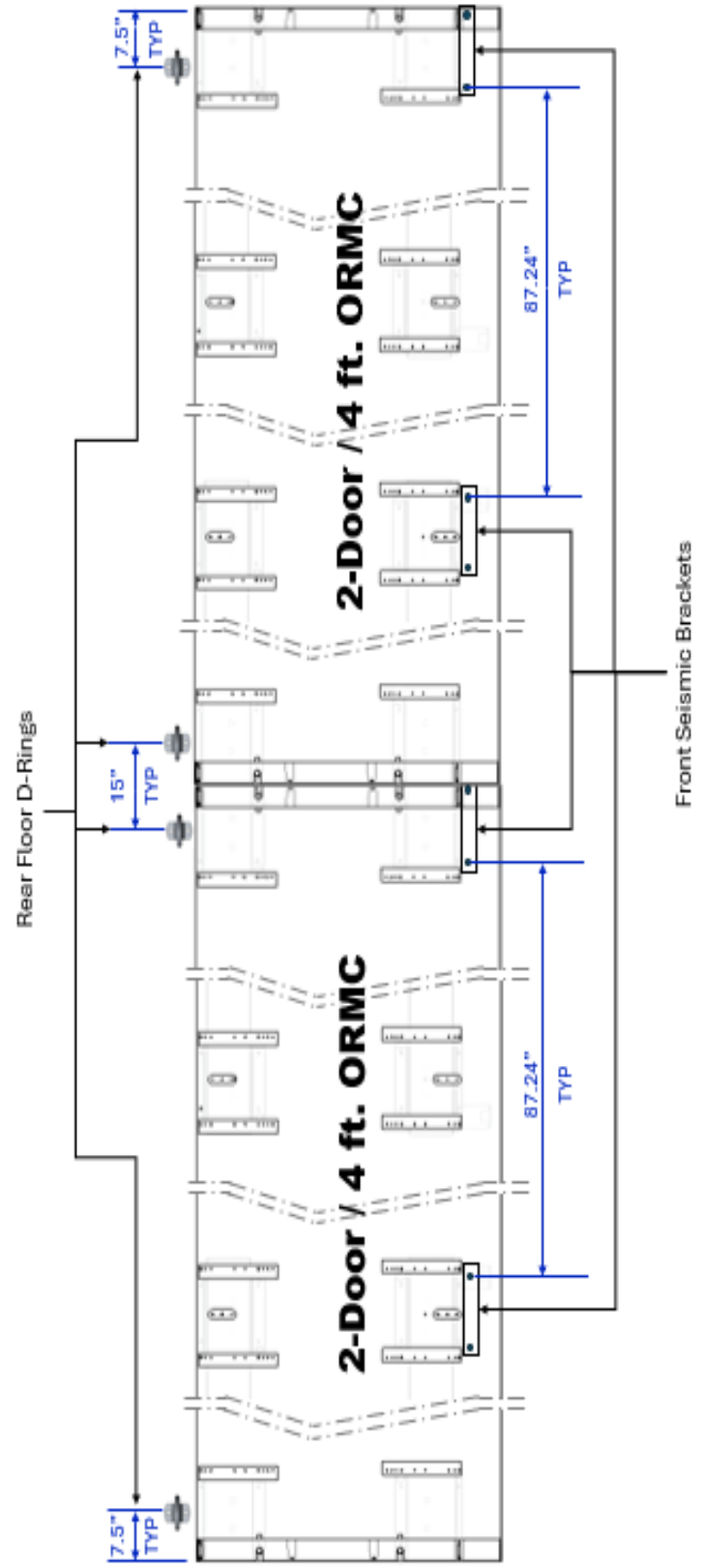

FIGURE 8: Rear Wall Mount Installation Kit

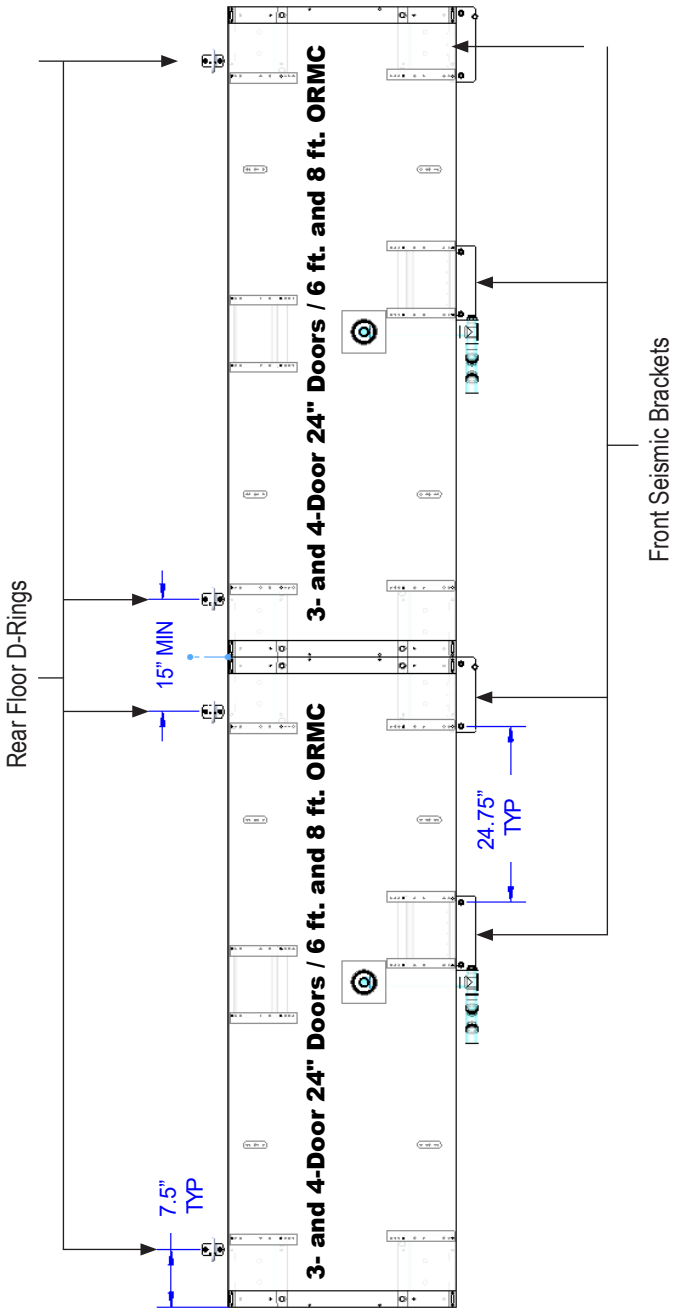

ZERO ZONE, INC. • 800-247-4496 • ZERO-ZONE.COM
© 2026 Zero Zone, Inc. All Rights Reserved. • NOV 2026

66-0180 REV D

SEISMIC BRACKET INSTALLATION

FIGURE 9: Rear Wall Mount Installation Kit

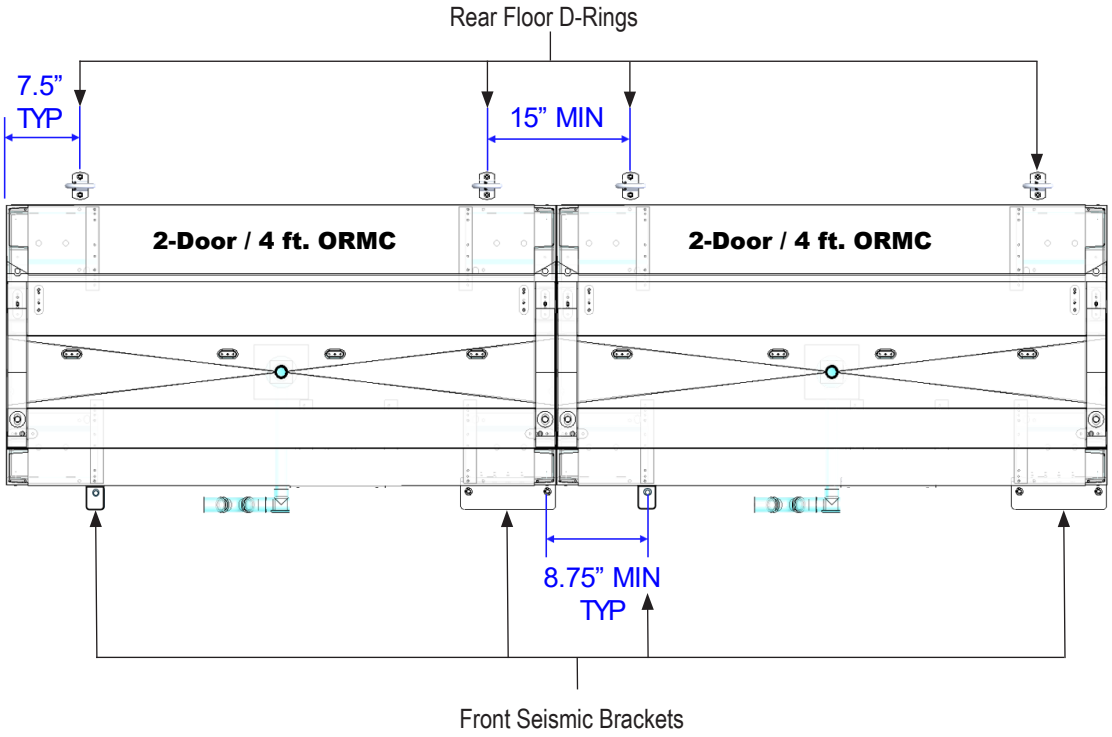

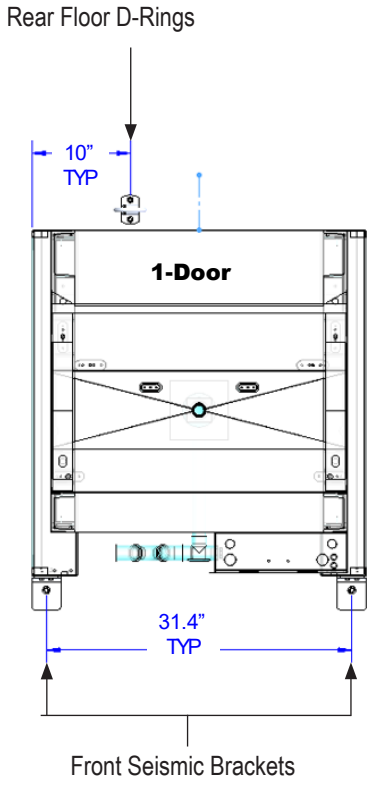

ZERO ZONE, INC. • 800-247-4496 • ZERO-ZONE.COM
© 2026 Zero Zone, Inc. All Rights Reserved. • NOV 2026
66-0180 REV D

SEISMIC BRACKET INSTALLATION

FIGURE 10: Rope Wire Looping

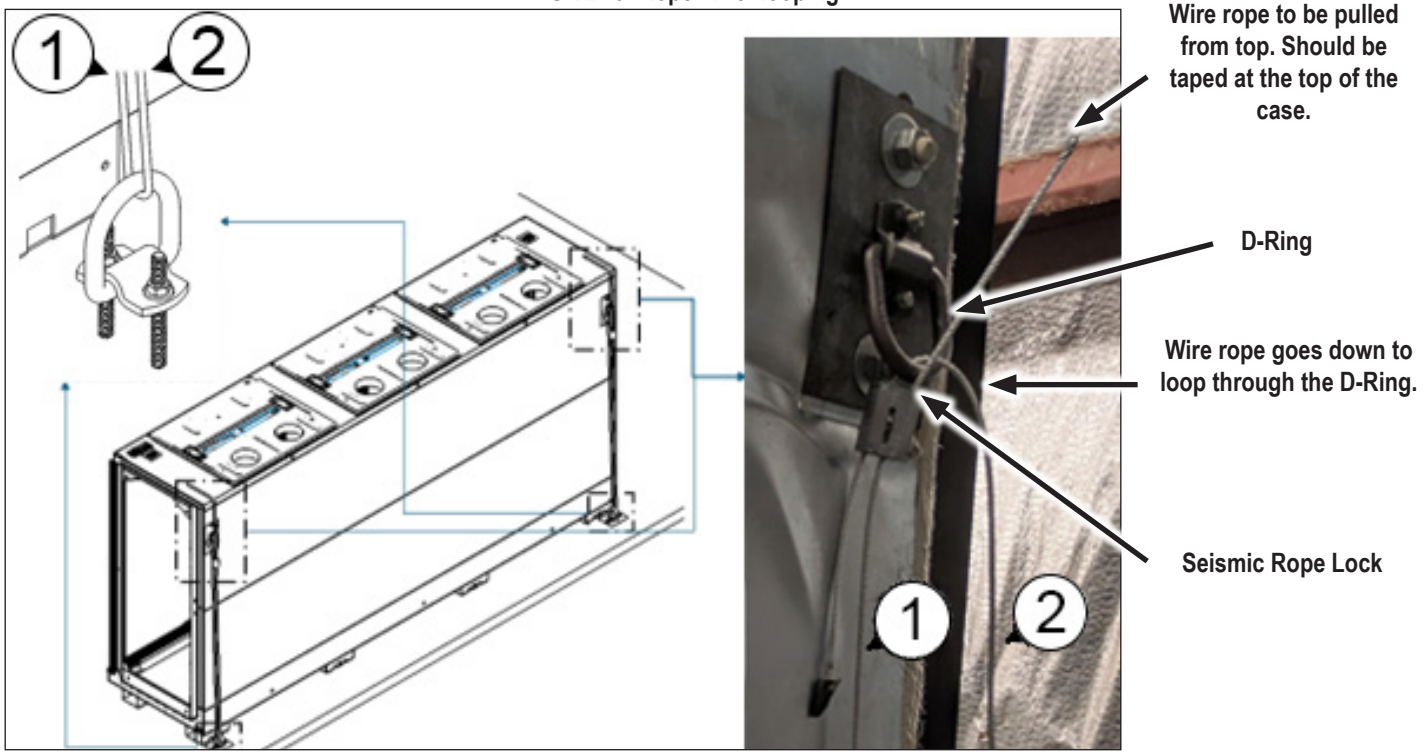

6.2. Position the Seismic Rope Lock near the D-Ring on the rear of the display case and on the inside of the Seismic Rope (See Figure 7 and See Figure 10) so that the Seismic Wire Rope locks when the Wire Rope is pulled from the top.

6.3. Ensure the Wire Rope and the Seismic Rope Locks are routed around the D-Ring to lock it in position (**See Figure 11 on Page 7**).

FIGURE 11: Locked Seismic Rope Lock

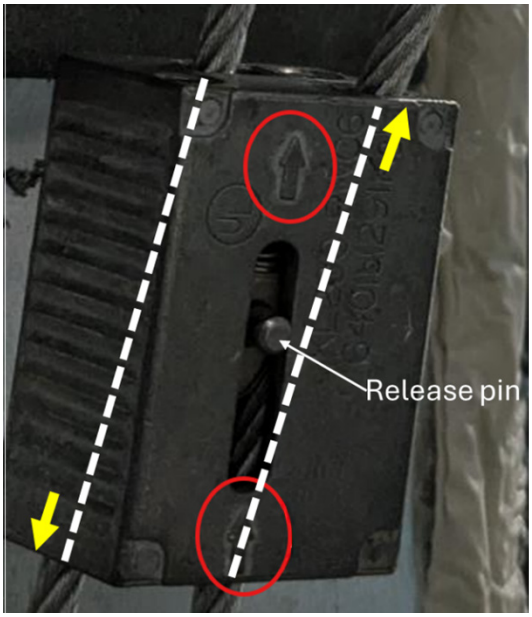

7. Move the display case into its final position.

   7.1. Fasten the rear-floor D-Rings.

   7.2. Place the unit between the front and rear anchors.

   7.3. Shim and level the display cases.

8. Install the Front Seismic Anchor Brackets.

   8.1. Fasten the Front Seismic Bracket to the base bracket of the display case using self-tapping ¼" screws (**See Figure 6 on Page 4**).

   8.2. Attach the components to the threaded rod anchors. Install the washer and nut onto each threaded rod and tighten securely to the floor (**Figure 3 on Page 4**).

9. Finalize Seismic Wire Rope installation.

   9.1. Pull the rope from the top to tighten it using the Seismic Rope Locks. The D-Rings will keep the Seismic Rope Lock in place as the rope is pulled.

   9.2. Roll and tape the excess rope to the top or rear panel of the display case.

© 2026 Zero Zone, Inc. All Rights Reserved. • NOV 2026

SEISMIC BRACKET INSTALLATION

FIGURE 12: Single Display Cases Placed Back-to Back

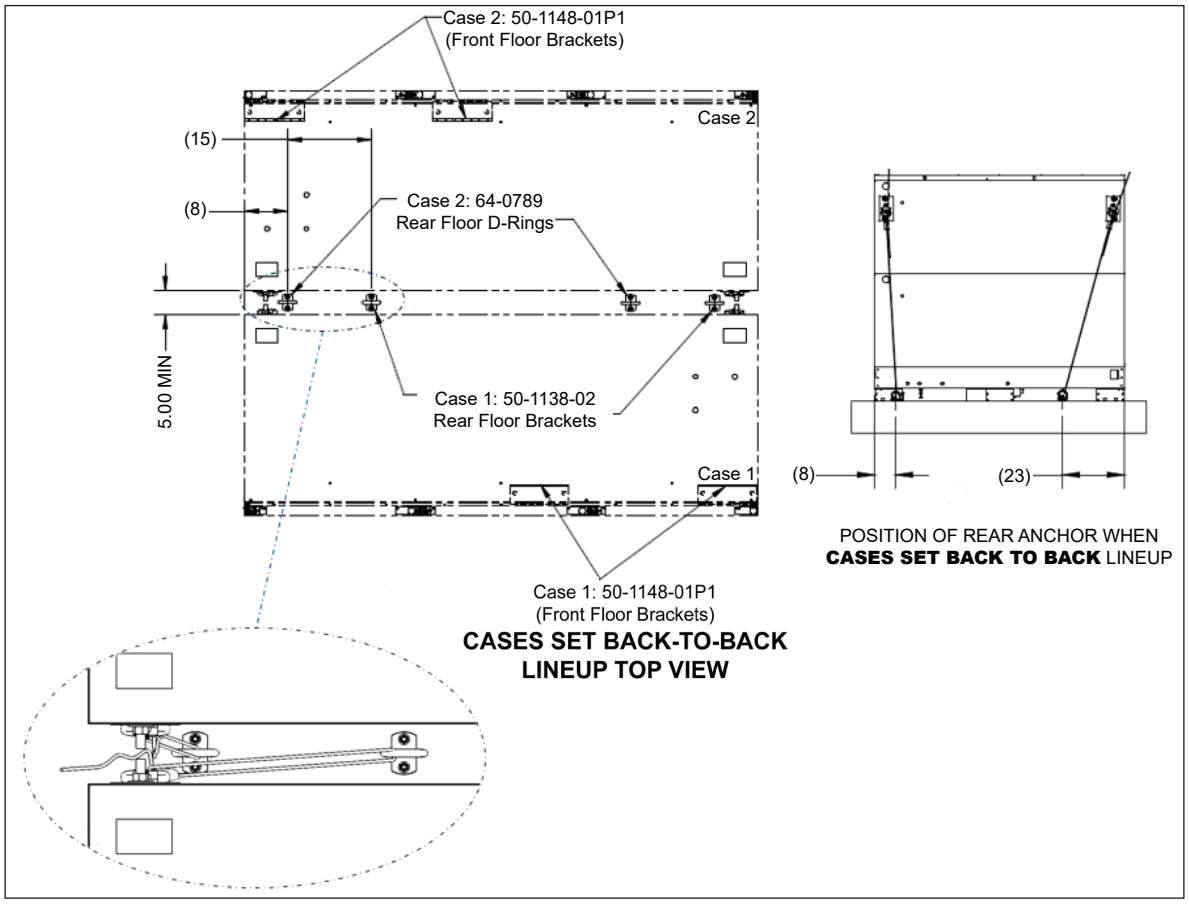

FIGURE 13: Single Display Cases Placed Back-to Back

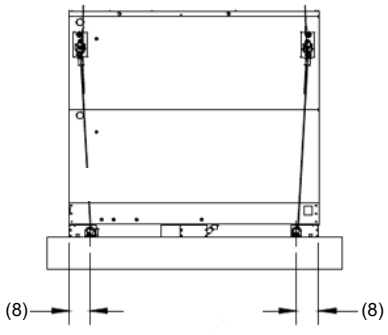

ZERO ZONE, INC. • 800-247-4496 • ZERO-ZONE.COM
© 2026 Zero Zone, Inc. All Rights Reserved. • NOV 2026

SEISMIC BRACKET INSTALLATION BACK-TO-BACK

Installation for Back-to-Back Cases

Note: Reference the Seismic Bracket Assembly Back-to-Back drawing 173-0401.

10. Prepare the floor for anchor installation.

    10.1. Mark the location of the case lineup on the floor according to the store layout (**See Figure 16 on Page 10** and **See Figure 17 on Page 11**).

11. Verify the hole locations by placing the Back-to-Back Seismic Anchor Brackets on the floor before drilling. Remove the brackets before drilling.

12. Drill the anchor holes.

    12.1. Check Hilti's specifications at www.hilti.com for the correct anchor type, hole depth, and diameter.

    12.2. Embedment shall be in accordance with **Table 2 on Page 4**, using Hilti HIT-RE500 V3 two-part epoxy. All installation shall follow the manufacturer's instructions for hole preparation, adhesive application, and curing. Consult Hilti for the most current information.

    12.3. Drill holes according to these specifications.

13. Epoxy the ½" threaded rods into the holes.

14. Move the display case into its final position.

    14.1. Shim and level the display cases.

Note: The Back-to-Back Seismic Anchor Bracket as an individual part will pass through the display case bases and be anchored using the Hilti fasteners to the floor.

15. Install the Back-to-Back Seismic Anchor Brackets.

    15.1. Install the Back-to-Back Seismic Anchor Brackets (2 per case) through each of the outermost bases (See Figure 14 and See Figure 15).

    15.2. Attach the components to the threaded rod anchors. Install the washer and nut onto each threaded rod and tighten securely to the floor (**See Figure 3 on Page 4**).

FIGURE 15: Back-to-Back Anchor Locations

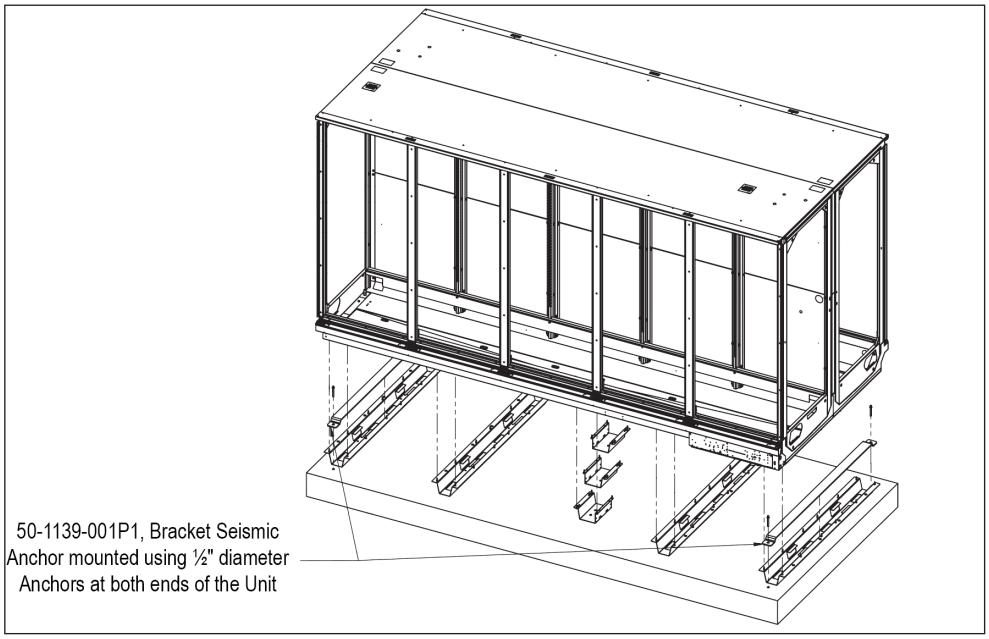

FIGURE 14: Back-to-Back Seismic Anchor Bracket

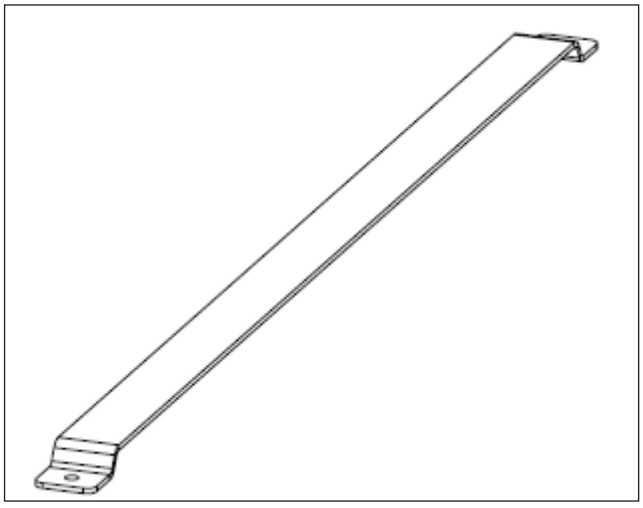

ZERO ZONE, INC. • 800-247-4496 • ZERO-ZONE.COM
© 2026 Zero Zone, Inc. All Rights Reserved. • NOV 2026
66-0180 REV D

SEISMIC BRACKET INSTALLATION BACK-TO-BACK

FIGURE 16: Back-to-Back Anchor Locations

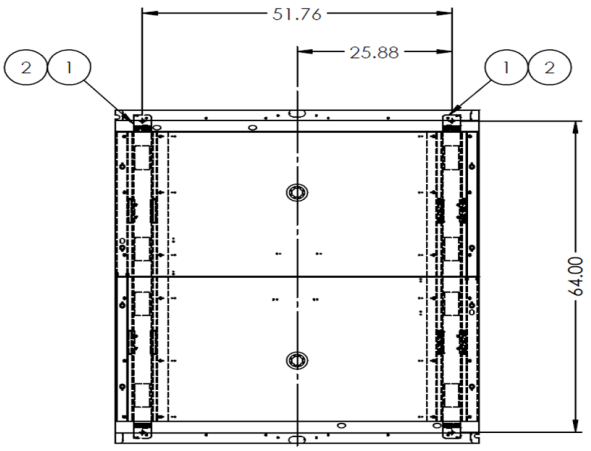

2 DOOR BACK TO BACK CASE SHOWN
MOUNTING HOLE DIMENSION

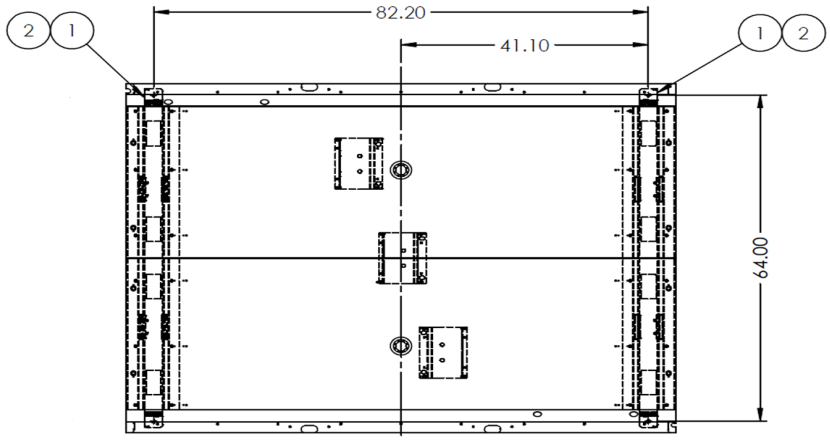

3 DOOR BACK TO BACK CASE SHOWN
MOUNTING HOLE DIMENSION

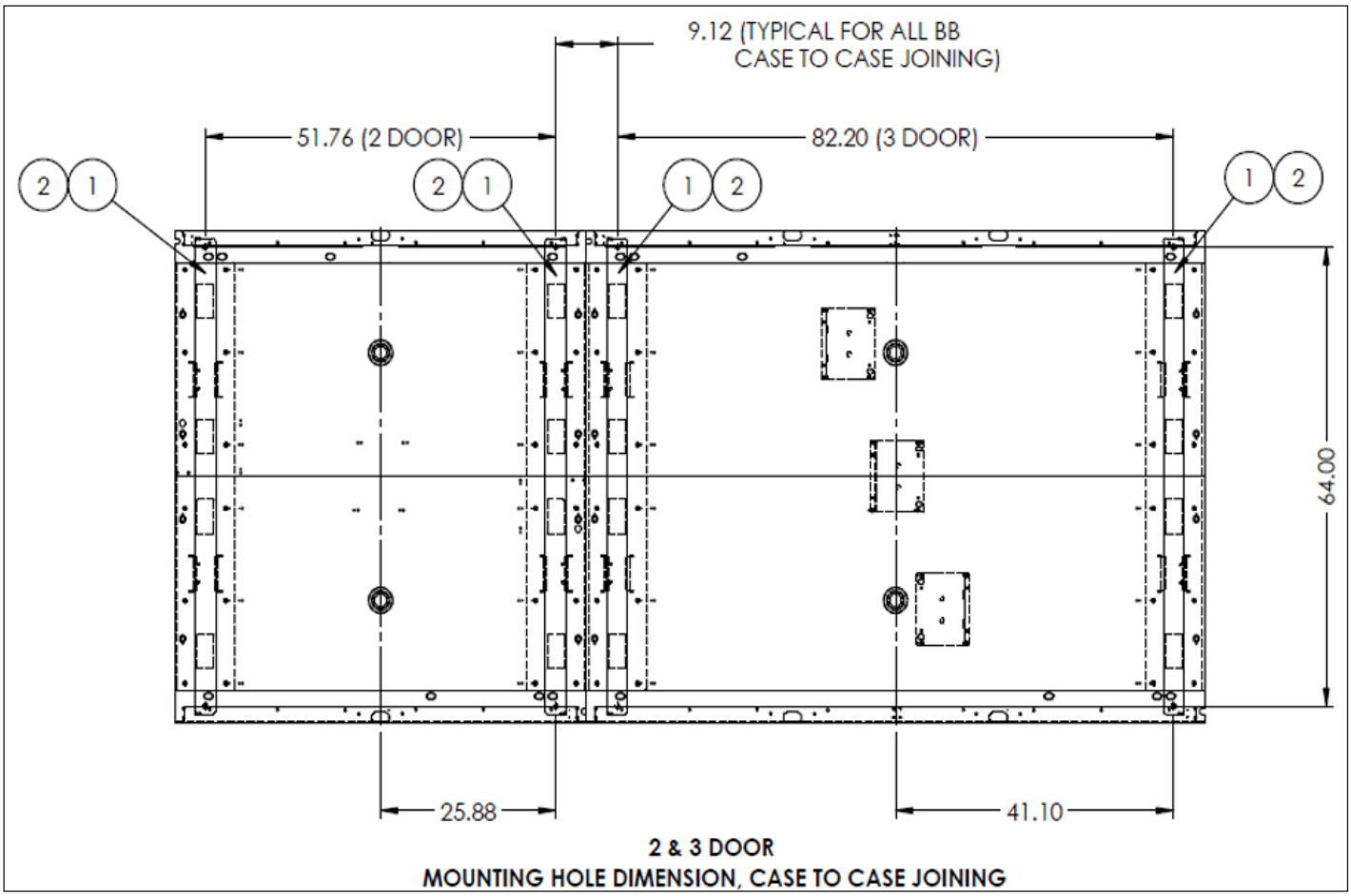

2 & 3 DOOR
MOUNTING HOLE DIMENSION, CASE TO CASE JOINING

© 2026 Zero Zone, Inc. All Rights Reserved. • NOV 2026

SEISMIC BRACKET INSTALLATION BACK-TO-BACK

FIGURE 17: Back-to-Back Anchor Locations

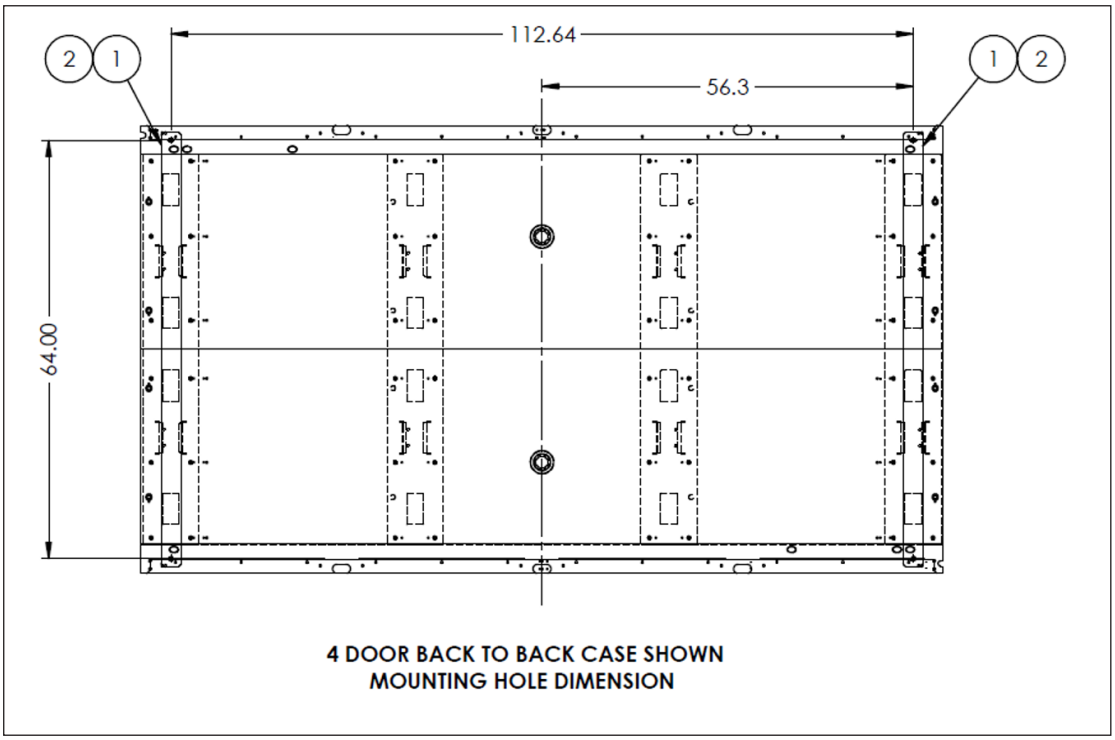

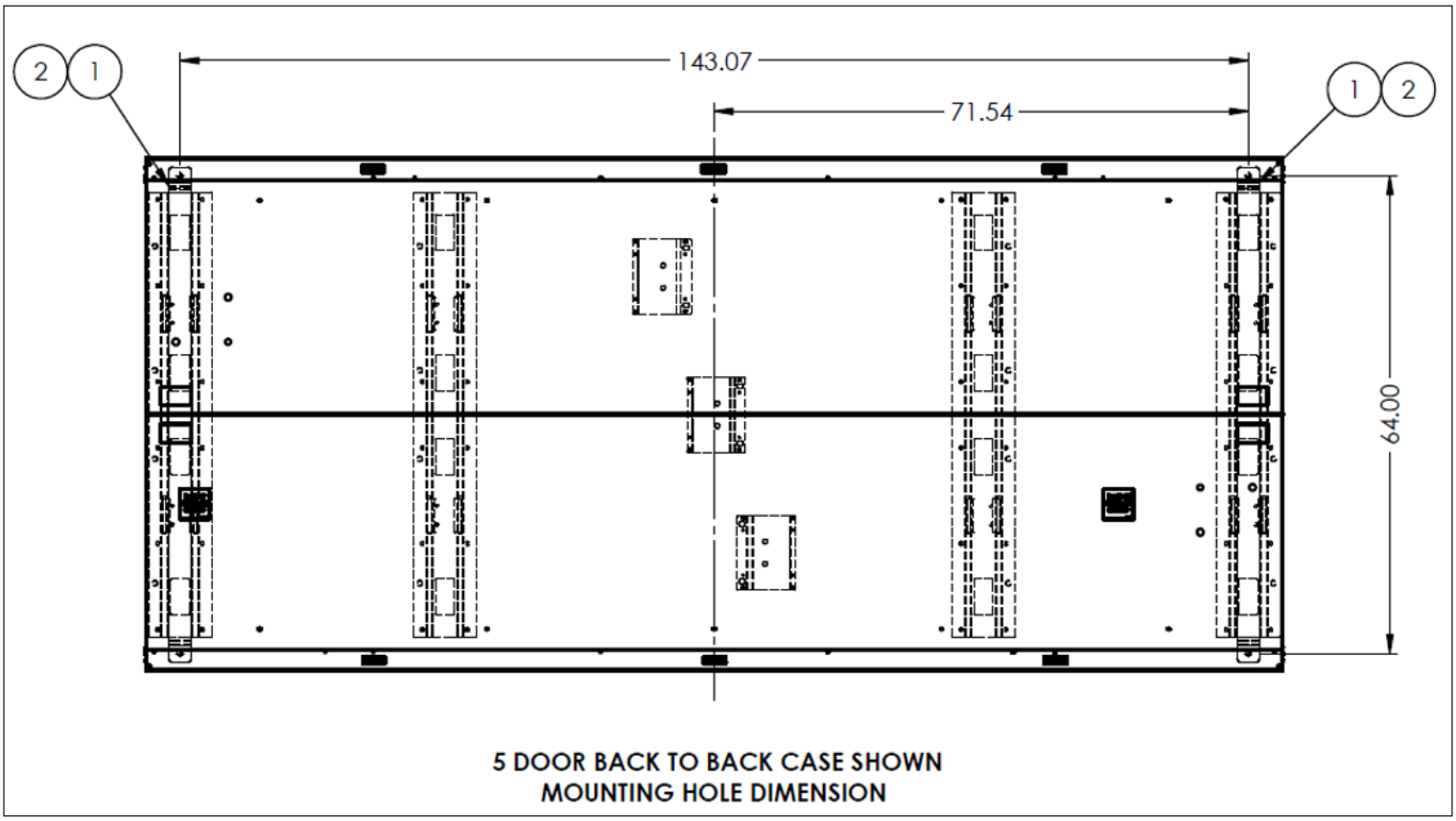

ZERO ZONE, INC. • 800-247-4496 • ZERO-ZONE.COM
© 2026 Zero Zone, Inc. All Rights Reserved. • NOV 2026
66-0180 REV D

INSTALLATION FOR SEISMIC EXPANSION BASES

Installation for Seismic Expansion Bases

Note: These instructions apply to assembly of the Seismic Expansion bases. Installation of the Front Seismic Bracket shall be performed on the Seismic Expansion Bases, and Wire Rope anchoring follows the same procedure used for standard case installations.

1. Determine the required seismic anchors using **Table 3**.
2. Remove the spacers in the three corners marked in **Figure 18**. Re-attach the fasteners firmly to the display case. Attach the supplied self-tapping fastener included with the seismic kit (**See Figure 18**).
3. Place the Seismic Expansion Base beneath the installed base, ensuring it is oriented flush and aligned at the right end (**Figure 20, Figure 21, and Figure 22 on page 14**).
4. Insert the hex bolt through the washers and aligned mounting holes. Install the washers and hex nuts from the opposite side (**Figure 19 on page 13**).
5. Cover the exposed threads on hex bolts with bolt thread plug (**Figure 19 on page 13**).
6. Install the anchor brackets in accordance with the instructions provided in the section **"Installation for Standard Cases" on page 3**.

FIGURE 18: Spacer Removal

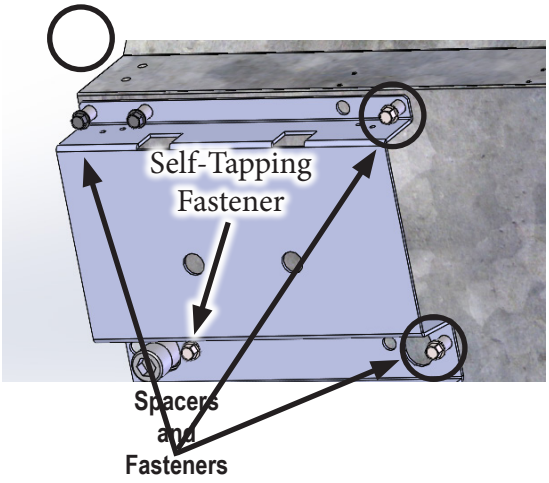

TABLE 3: Seismic Expansion Anchor Selection
Up to 7 1/2" Height

S_{DS}	Case Style **Elevated 2-6 Door:** RHLC30(T), RHMC30(T) Front Anchors: 2 Brackets per Case Unless Otherwise Noted Rear Anchors: 2 Cables per case (Top Corners) except 1 Cable @ Single Door Case	S_{DS}
≤ 0.7	No Anchors Required	≤ 0.7
≤ 0.8		≤ 0.8
≤ 0.9		≤ 0.9
≤ 1.0	Front and Rear Anchors (any slab thickness)	≤ 1.0
≤ 1.1		≤ 1.1
≤ 1.2		≤ 1.2
≤ 1.3	Need to verify Slab is at least 5" Thick. Front and Rear Anchors	≤ 1.3
≤ 1.4		≤ 1.4
≤ 1.5		≤ 1.5
≤ 1.6	Need to verify Slab is at least 6" Thick. Front and Rear Anchors	≤ 1.6
≤ 1.7		≤ 1.7
≤ 1.8		≤ 1.8
≤ 1.9	Site Specific Engineering Required. Case Brackets may not be strong enough	≤ 1.9
≤ 2.0		≤ 2.0
≤ 2.1		≤ 2.1
≤ 2.2		≤ 2.2
≤ 2.3		≤ 2.3
≤ 2.4		≤ 2.4
> 2.4		> 2.4

ZERO ZONE, INC. • 800-247-4496 • ZERO-ZONE.COM
© 2026 Zero Zone, Inc. All Rights Reserved. • NOV 2026

INSTALLATION FOR SEISMIC EXPANSION BASES

FIGURE 19: Expansion Base Assembly

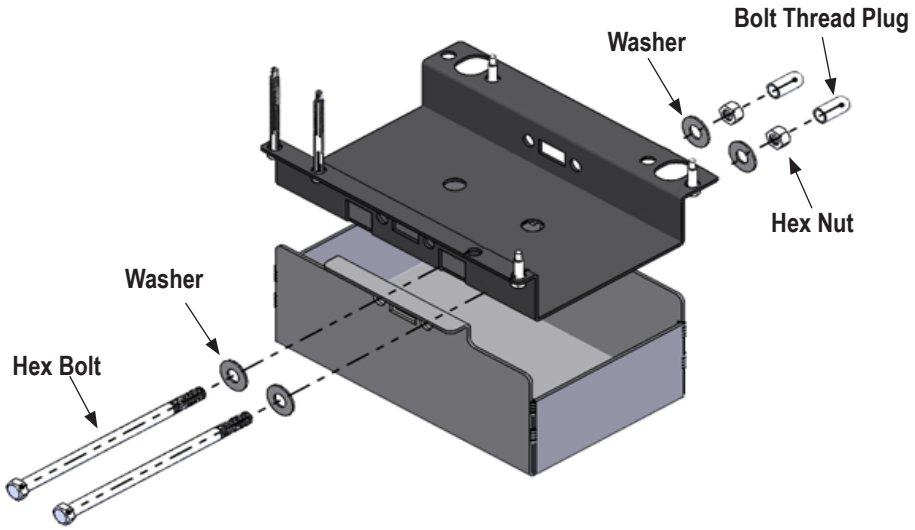

FIGURE 20: Expansion Base Assembly 2-Door
View from Front of Case
The circled bases are the seismic expansion bases

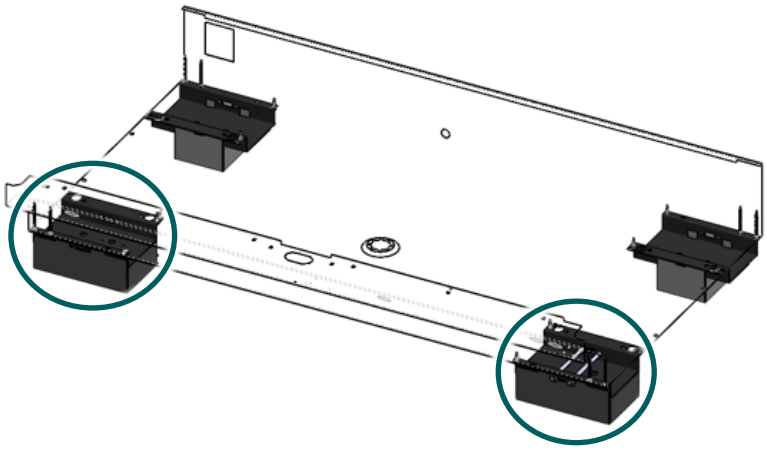

ZERO ZONE, INC. • 800-247-4496 • ZERO-ZONE.COM
© 2026 Zero Zone, Inc. All Rights Reserved. • NOV 2026
66-0180 REV D

INSTALLATION FOR SEISMIC EXPANSION BASES

FIGURE 21: Expansion Base Assembly 3- and 4-Door
View from Front of Case
The circled bases are the seismic expansion bases

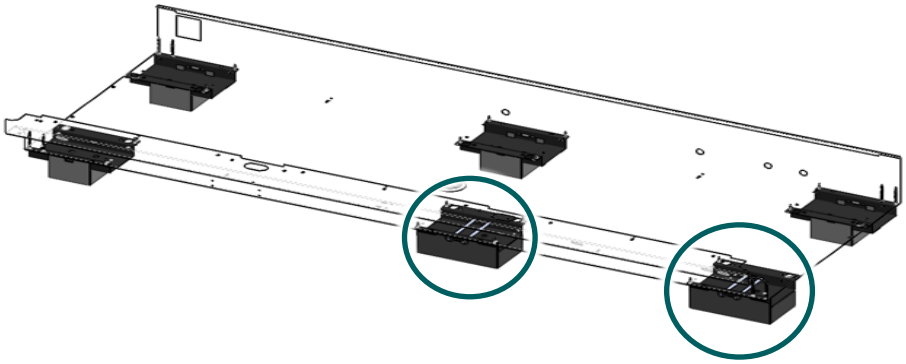

FIGURE 22: Expansion Base Assembly 5- and 6-Door
View from Front of Case
The circled bases are the seismic expansion bases

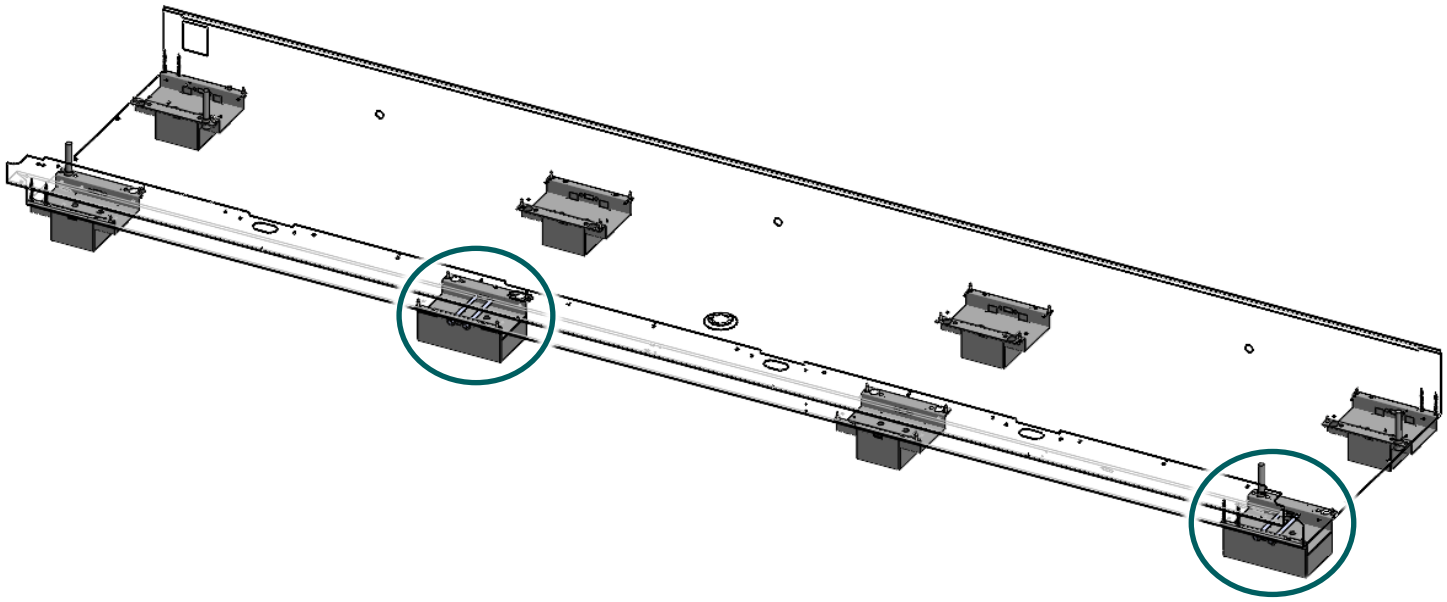

ZERO ZONE, INC. • 800-247-4496 • ZERO-ZONE.COM
© 2026 Zero Zone, Inc. All Rights Reserved. • NOV 2026