GUARDIAN SEISMIC BRACKET INSTALLATION

Note: Review of design-build projects and conformity to local building codes must be verified by a registered design professional.

These instructions are for installing seismic restraints onto a Guardian display case. The installer is responsible for purchasing the correct bolts/fasteners from Hilti.

These instructions apply to Zero Zone models:

- CGMC30
- CGLC30
- CGMC24
- CGLC24

ZERO ZONE SEISMIC INSTALLATION REQUIREMENTS

Zero Zone Case models require seismic anchoring using a front bracket. The front bracket installs through the base as seen in **Figure 6 on page 5**. A rear Rope Anchor Kit assembled on both sides as shown in **Figure 17 and Figure 18 on page 9**. Additionally, the rear wall of the unit comes with a factory-installed Seismic Rear Mount Installation Kit.

Table of Contents

SEISMIC BRACKET INSTALLATION 2
- Determining the Anchor Method for the Geographic Location 2
- Installation for Standard Cases 4

SEISMIC BACK-TO-BACK CASE LINEUP 10

INSTALLATION FOR SEISMIC EXPANSION BASES 12
- Installation for Seismic Expansion Bases 12



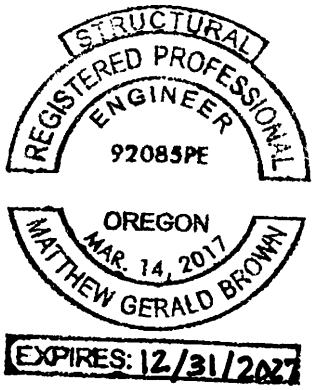

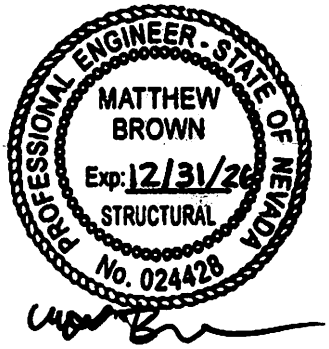



Matthew Brown

Digitally signed by Matthew Brown
DN: C=US, E=MattB@NewportSD.com, O="Newport Structural Design, Inc.", CN=Matthew Brown
Date: 2026.11.19 10:35:42-08'00'

ZERO ZONE, INC. • 800-247-4496 • ZERO-ZONE.COM
© 2026 Zero Zone, Inc. All Rights Reserved. • NOV 2026

66-0187 REV B

SEISMIC BRACKET INSTALLATION

Determining the Anchor Method for the Geographic Location

Anchor requirements for the installation location shall be determined based on the site's seismic risk classification. This will need to be done before the installation of any standard or back-to-back display case. Visit www.seismicmaps.org and use the following steps to determine the site's seismic risk classification:

1. In the Reference drop down menu, choose ASCE 7-22.
2. Set the Site Class as "Default." The Risk Category may be ignored.
3. Enter the installation address and press Enter or click Go.
4. The SDS value is declared in the resulting table (See Figure 1).
5. Compare the SDS value to the charts on the following pages to determine the required anchors.

FIGURE 1: S_{DS} Value Example

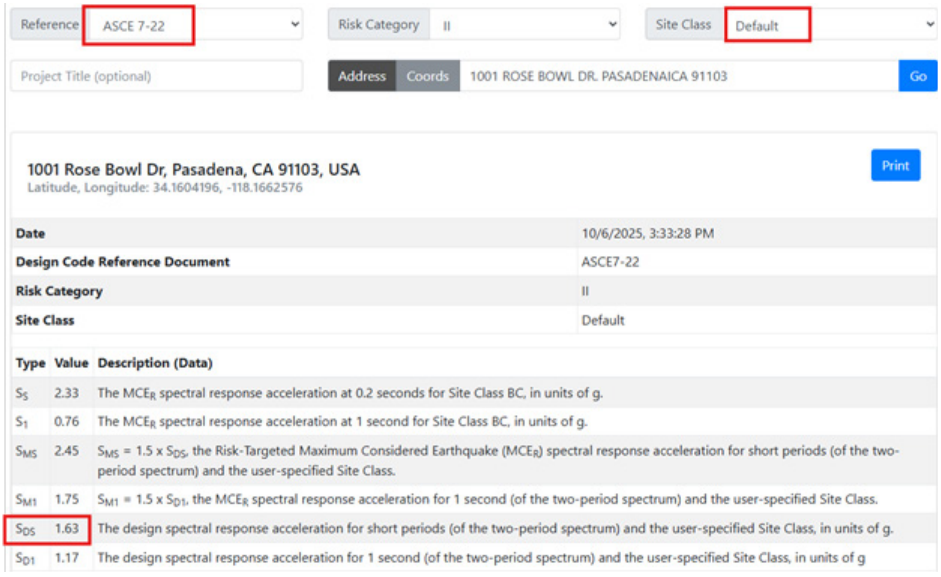

ZERO ZONE, INC. • 800-247-4496 • ZERO-ZONE.COM
© 2026 Zero Zone, Inc. All Rights Reserved. • NOV 2026
66-0187 REV B

SEISMIC BRACKET INSTALLATION

TABLE 1: S_{DS} Value Anchor Selection - Standard Bases up to 5 ½" Height

S_{DS}	Standard Base			S_{DS}
	24" Door Width	30" Door Width		
	2-Door, 3-Door, 4-Door, 6-Door	2-Door, 3-Door, 4-Door	5-Door	
≤ 0.7	No Anchors Required			≤ 0.7
≤ 0.8	Standard Anchor Layout (any slab thickness)			≤ 0.8
≤ 0.9				≤ 0.9
≤ 1.0				≤ 1.0
≤ 1.1				≤ 1.1
≤ 1.2				≤ 1.2
≤ 1.3				≤ 1.3
≤ 1.4				≤ 1.4
≤ 1.5	Standard Anchor Layout (any slab thickness)	5" Min Slab w/ Standard Anchor Layout, Otherwise High Seismic Anchor Layout		≤ 1.5
≤ 1.6				≤ 1.6
≤ 1.7				≤ 1.7
≤ 1.8	5" Min Slab w/ Standard Anchor Layout	High Seismic Anchor Layout (any slab thickness)		≤ 1.8
≤ 1.9				≤ 1.9
≤ 2.0				≤ 2.0
≤ 2.1	Site Specific Enginering Required			≤ 2.1
≤ 2.2				≤ 2.2
≤ 2.3				≤ 2.3
≤ 2.4				≤ 2.4
> 2.4		Site Specific Enginering Required		> 2.4

ZERO ZONE, INC. • 800-247-4496 • ZERO-ZONE.COM
© 2026 Zero Zone, Inc. All Rights Reserved. • NOV 2026
66-0187 REV B

SEISMIC BRACKET INSTALLATION

Installation for Standard Cases

Note: Reference Seismic Bracket Assembly drawing 173-0439.

TABLE 2: Minimum Anchor Embedment	
Rod Length	**Embedment**
6"	3.75" embedment in verified 5" thick slab.
6"	2 ¾" minimum embedment in 4" or unknown slab.
Note: Extra Protruding rod may be left or cut down if desired.	

1. Determine whether the Standard or High seismic anchor layout is required based on the information provided in **Table 1** or **Table 5.**
2. Determine How many bracket and anchors are required (**See Table 1**, **Table 3**, or **Table 4**).
3. Prepare the floor for anchor installation.
   - 3.1. Mark the location of the case lineup on the floor according to the store layout, using hole locations shown in **Figure 11**, **Figure 12**, **Figure 14**, **Figure 15**.
   - 3.2. Drill the anchor holes.

Note: Always ensure anchors are separated by a minimum of 8.25".

   - 3.3. Check Hilti's specifications at www.hilti.com for the correct anchor type, hole depth, and diameter.
   - 3.4. Embedment shall be in accordance with **Table 2**, using Hilti HIT-RE500 V3 two-part epoxy. All installation shall follow the manufacturer's instructions for hole preparation.
   - 3.5. Drill holes according to these specifications.
4. Install the Front Seismic Anchor Brackets.
   - 4.1. Position brackets as shown in **Figure 11**, **Figure 12**, **Figure 14**, **Figure 15**.
   - 4.2. Ensure the front-end Seismic Anchor Bracket position is consistent throughout the lineup.

FIGURE 3: Floor Rear D-Ring Installation Kit

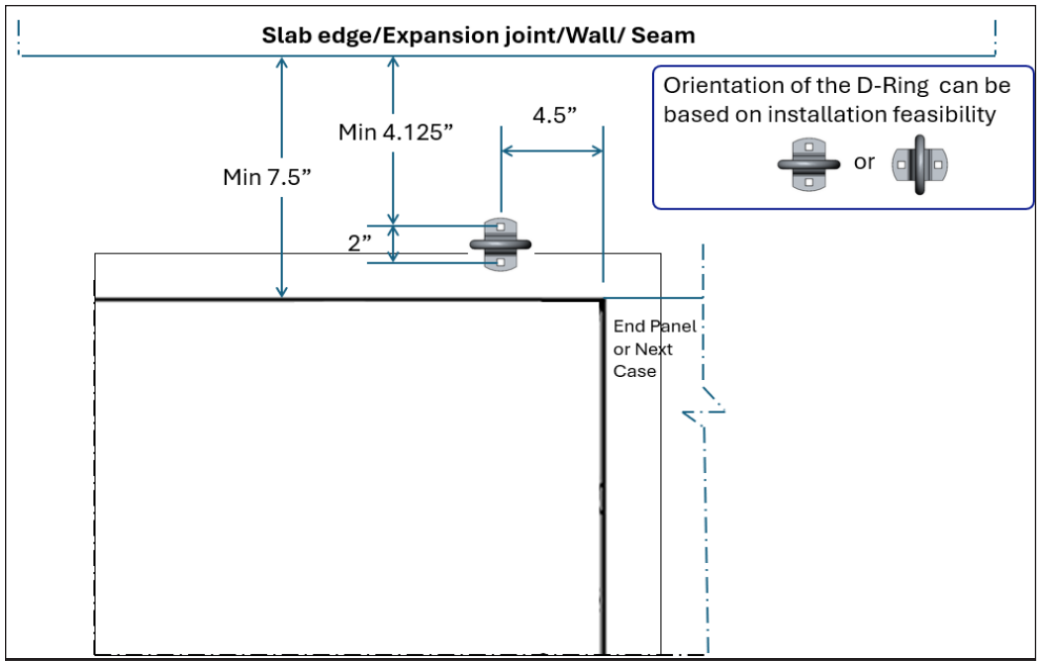

FIGURE 4: Rear Wall Mount Installation Kit Factory Installed

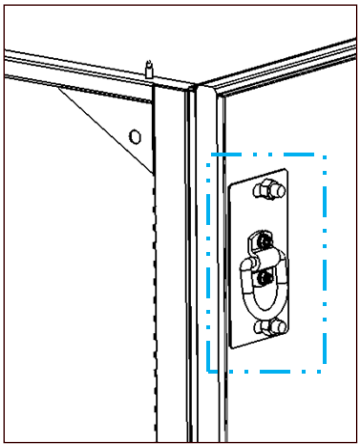

FIGURE 2: Floor Anchors

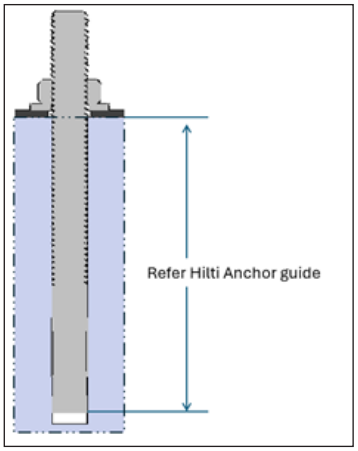

FIGURE 5: No Drain on Case

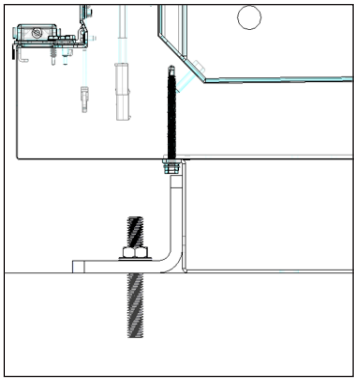

ZERO ZONE, INC. • 800-247-4496 • ZERO-ZONE.COM
© 2026 Zero Zone, Inc. All Rights Reserved. • NOV 2026

66-0187 REV B

SEISMIC BRACKET INSTALLATION

5. Install the rear-floor D-Rings.

    5.1. All installation shall follow the manufacturer's instructions for adhesive application and curing. Consult Hilti for the most current information.

    5.2. Epoxy the ⅜" threaded rods into the holes and tighten the D-Rings to the floor with the washer and nuts provided.

    5.3. Epoxy the ½" threaded rods into the front hole location. Loosely attach the front bracket to the floor with the ½" nut and washer provided (**See Figure 6**).

Note: The unit must be a minimum of 7.5" away from the wall to allow proper access to the D-Rings during Seismic Wire Rope installation.

6. Loosely install the Seismic Wire Rope.

    6.1. Loop the Seismic Wire Rope through both D-Rings (top and bottom). Secure the Seismic Wire Rope's excess length to the top of the ceiling with tape (**See Figure 7**).

Note: The seismic rope lock fitting indicates the Seismic Wire Rope entry and exit points, only allowing movement upward. The Seismic Wire Rope end leading to the top of the display case must pass through the upward side of the Seismic Rope Lock. The Seismic Wire Rope end leading to the D-Ring on the floor must pass through the downward side .

    6.2. Position the Seismic Rope Lock near the D-Ring on the rear of the display case and on the inside of the Seismic Rope (**See Figure 9** and **Figure 10**) so that the Seismic Wire Rope locks when the Wire Rope is pulled from the top.

Note: Depending on the seismic rating of the case (See Table 1 on Page 3), and the number of D-rings present (See Figure 17 and Figure 18), multiple ropes may be ran through the case-mounted D-ring.

    6.3. Ensure the Wire Rope and the Seismic Rope Locks are routed around the D-Ring to lock it in position (**See Figure 7**).

FIGURE 8: Floor Anchor Installation Kit

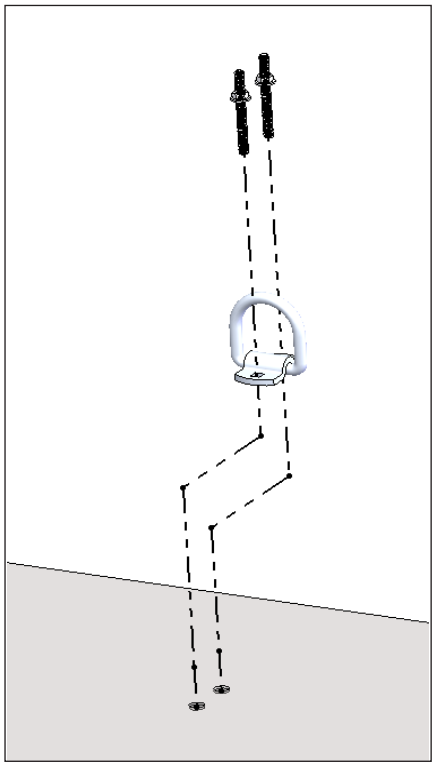

FIGURE 6: Floor Front Seismic Bracket Installation Kit

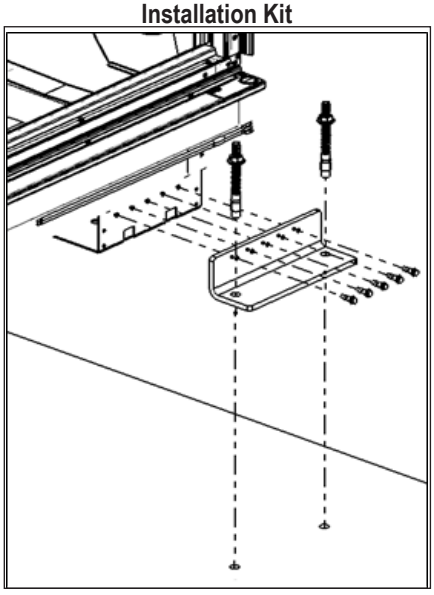

FIGURE 7: D-Ring and Wire Loop

View from right-end

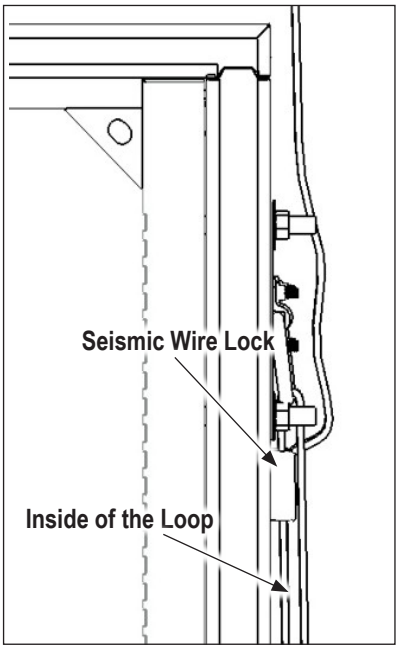

© 2026 Zero Zone, Inc. All Rights Reserved. • NOV 2026

SEISMIC BRACKET INSTALLATION

FIGURE 10: Rope Wire Looping

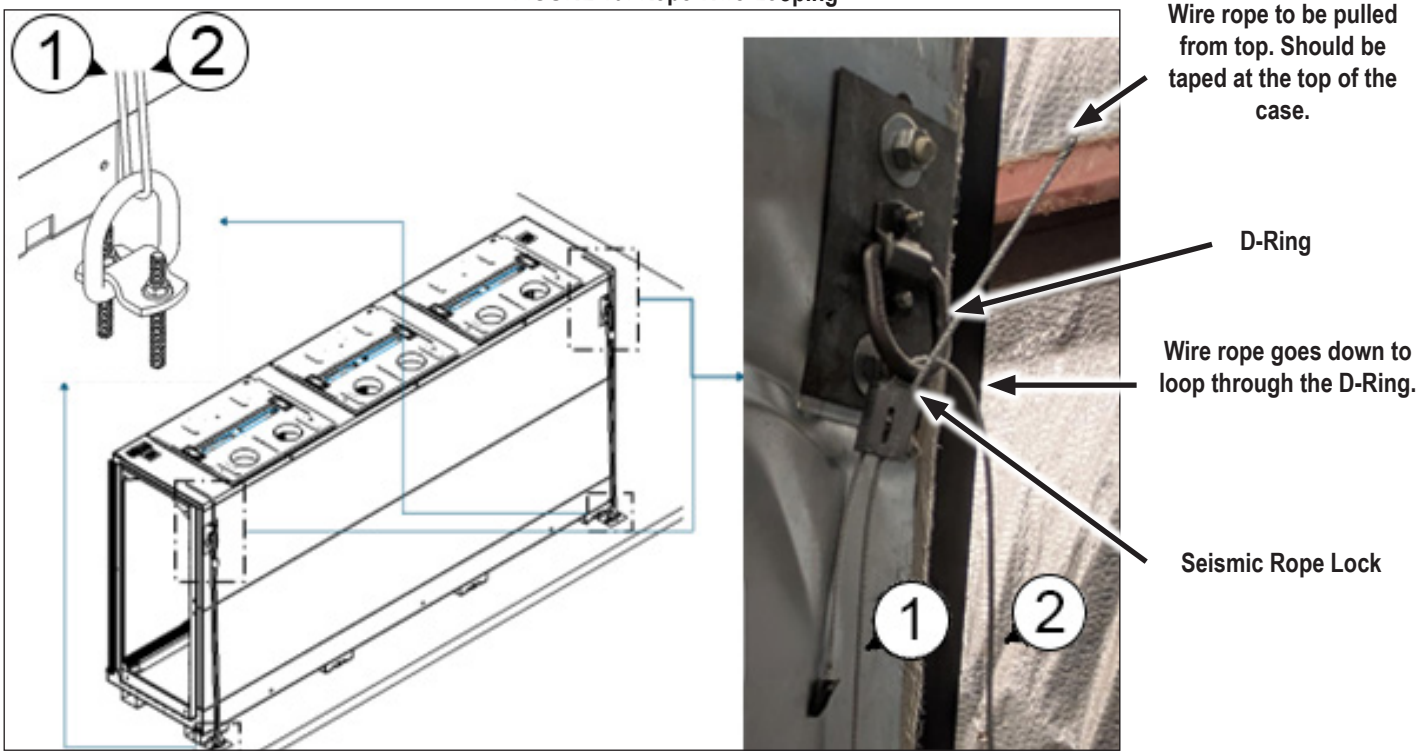

7. Move the display case into its final position.
   - 7.1. Fasten the rear-floor D-Rings.
   - 7.2. Place the unit between the front and rear anchors.
   - 7.3. Shim and level the display cases.
8. Install the Front Seismic Anchor Brackets.
9. Fasten the Front Seismic Bracket to the base bracket of the display case using self-tapping ¼" screws (**See Figure 6 on Page 5**).
   - 9.1. Attach the components to the threaded rod anchors. Install the washer and nut onto each threaded rod and tighten securely to the floor (**See Figure 10**).
10. Finalize Seismic Wire Rope installation.
    - 10.1. Pull the rope from the top to tighten it using the Seismic Rope Locks. The D-Rings will keep the Seismic Rope Lock in place as the rope is pulled.
    - 10.2. Roll and tape the excess rope to the top or rear panel of the display case.
    - 10.3. Attach the components to the threaded rod anchors. Install the washer and nut onto each threaded rod and tighten securely to the floor (**See Figure 10**).

FIGURE 9: Locked Seismic Rope Lock

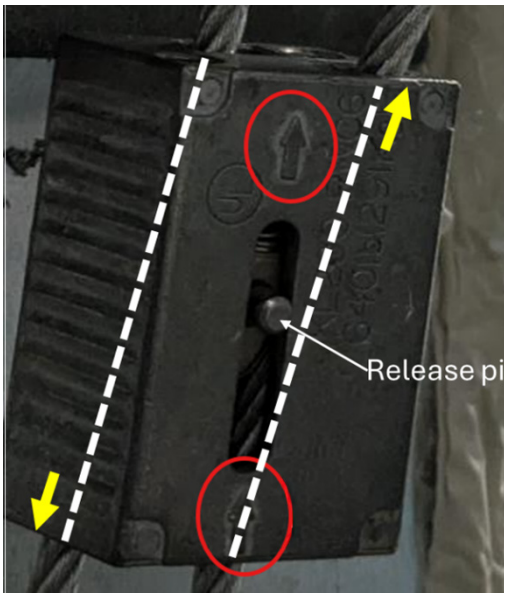

ZERO ZONE, INC. • 800-247-4496 • ZERO-ZONE.COM
© 2026 Zero Zone, Inc. All Rights Reserved. • NOV 2026
66-0187 REV B

SEISMIC BRACKET INSTALLATION

NOTE: ALWAYS ENSURE ALL ANCHORS ARE SEPARATED BY A MINIMUM OF 8.25 INCHES.

NOTE: THE 4 ANCHOR BOLT BRACKET SHOULD ALWAYS BE PLACED SYMMETRIC TO THE CASE BASE.

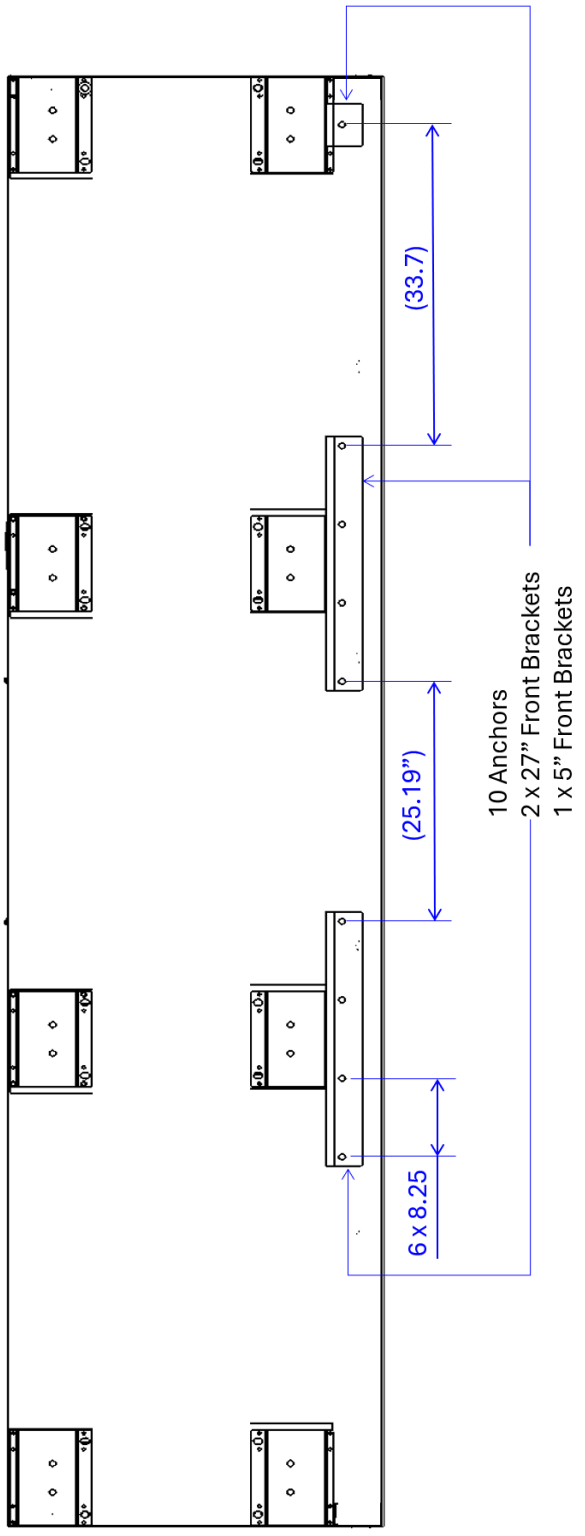

FIGURE 11: 5 Door CGMC30/CGLC30 High Seismic Anchor Layout

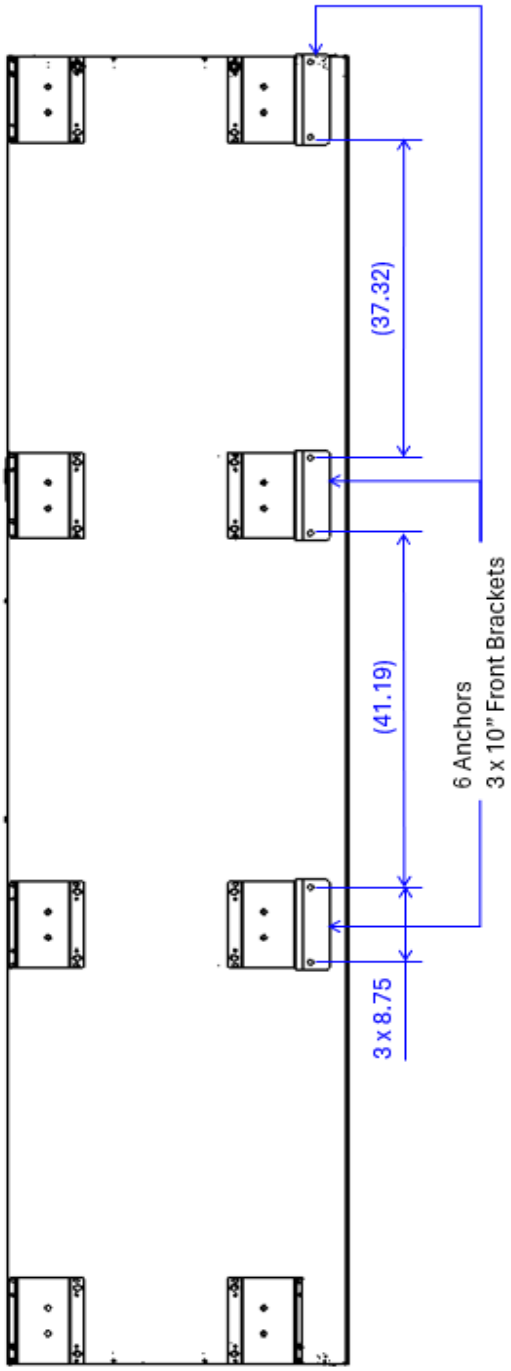

FIGURE 12: 5 and 6 Door CGMC/CGLC24/30 Standard Seismic Anchor Layout

ZERO ZONE, INC. • 800-247-4496 • ZERO-ZONE.COM
© 2026 Zero Zone, Inc. All Rights Reserved. • NOV 2026

66-0187 REV B

SEISMIC BRACKET INSTALLATION

FIGURE 13: 3 and 4 Door CGMC/CGLC24/30 Standard Seismic Anchor Layout

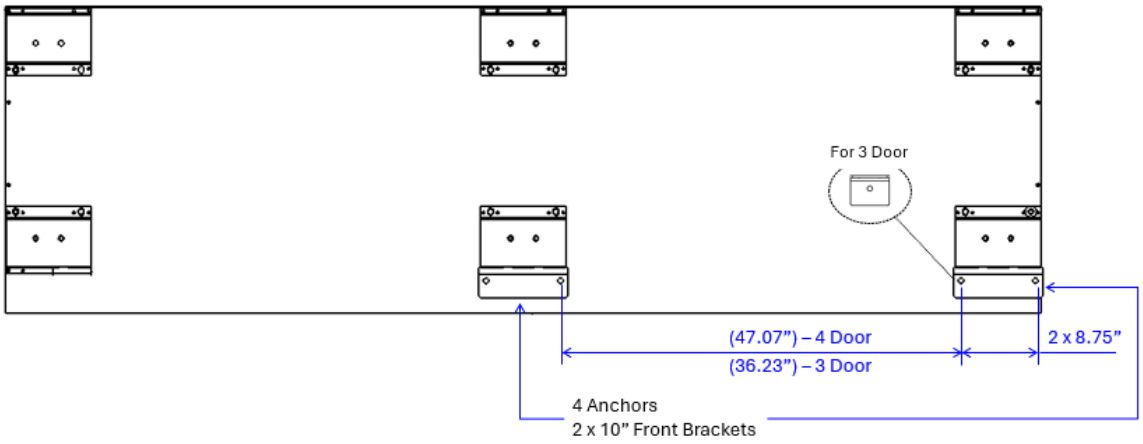

FIGURE 14: 3 and 4 Door CGMC30/CGLC30 High Seismic Anchor Layout

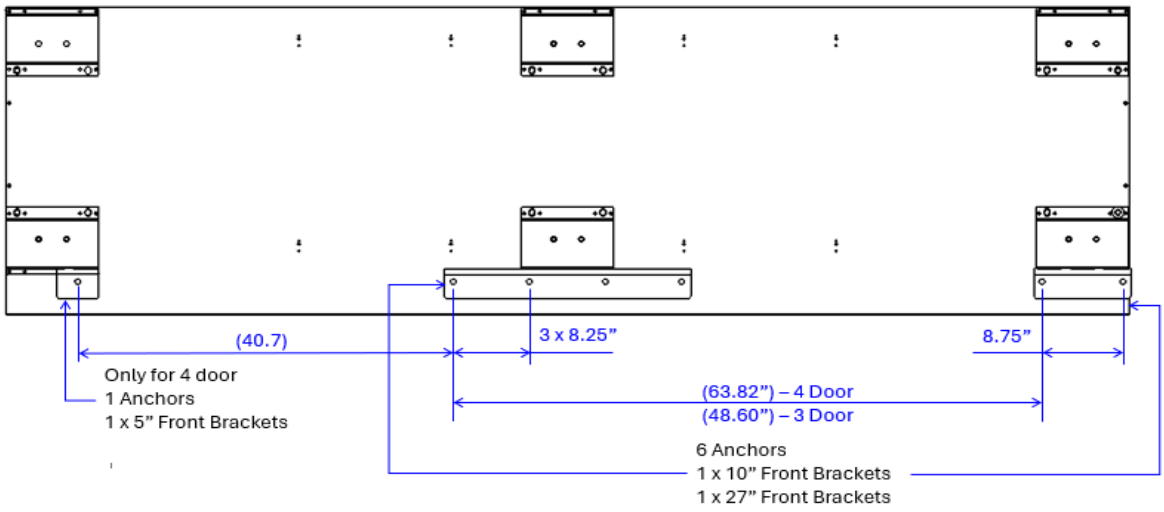

FIGURE 15: 2 Door CGMC/CGLC24/30 Standard Seismic Anchor Layout

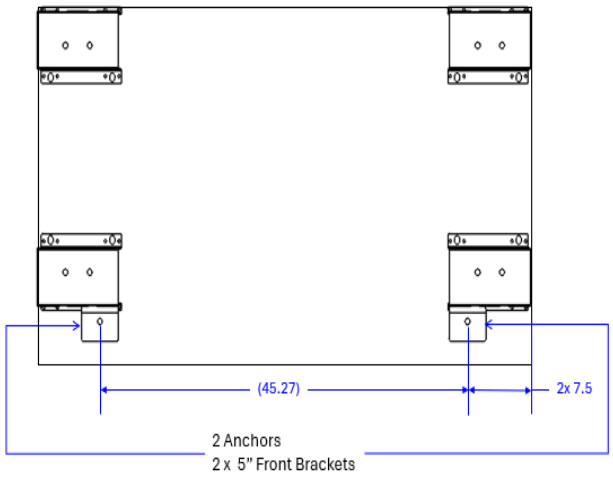

FIGURE 16: 2 Door CGMC30/CGLC30 High Seismic Anchor Layout

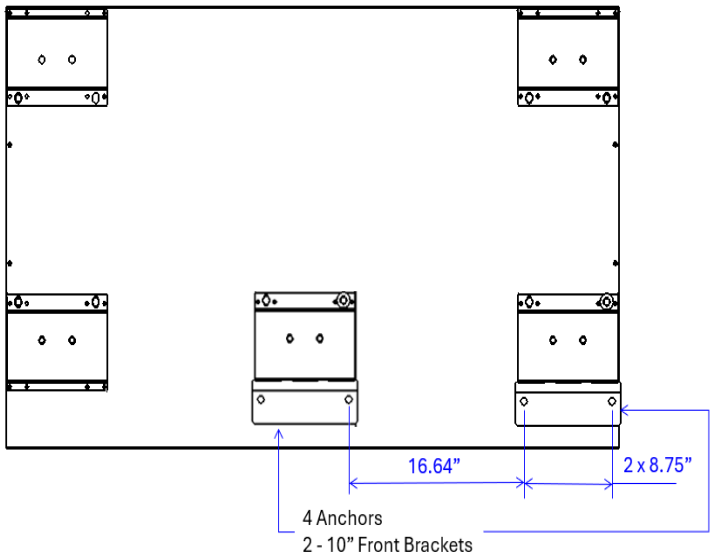

ZERO ZONE, INC. • 800-247-4496 • ZERO-ZONE.COM
© 2026 Zero Zone, Inc. All Rights Reserved. • NOV 2026

66-0187 REV B

SEISMIC BRACKET INSTALLATION

FIGURE 17: High Seismic Regions Field Installed D-Rings

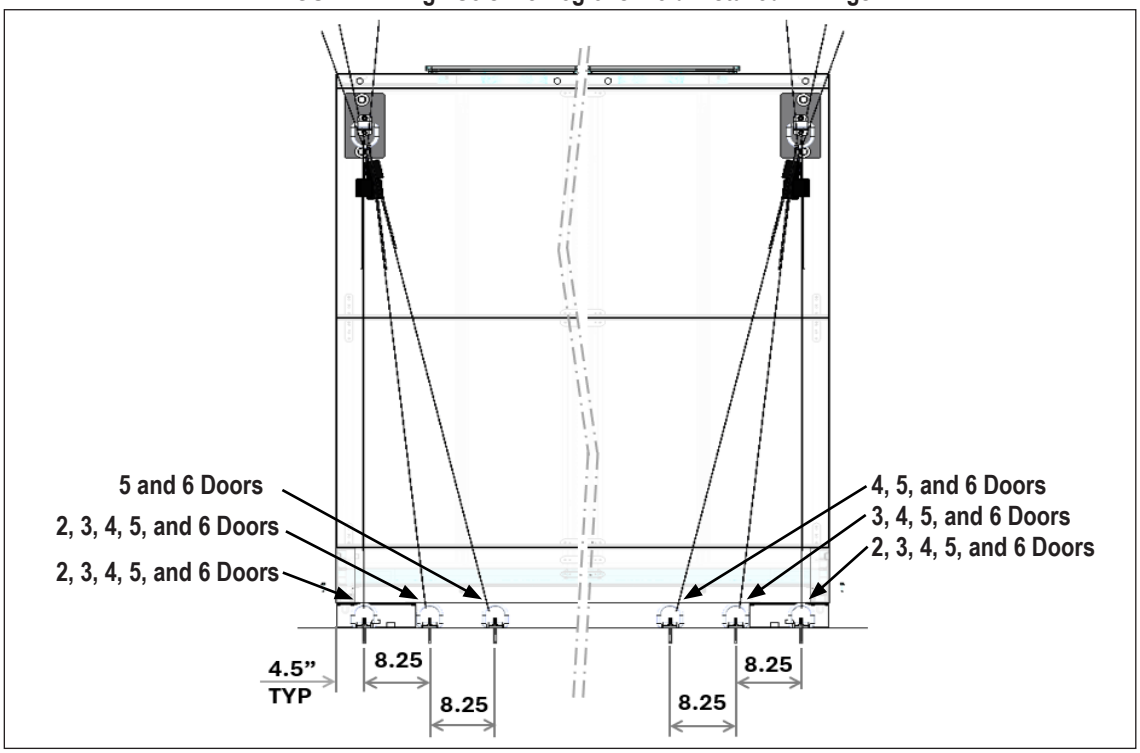

TABLE 3: High Seismic Layout Anchors	
Case Model	**Rear Floor D-Rings**
2CGMC24 2CGLC24 2CGMC30 2CGLC30	3 Rear Floor D-Rings
3CGMC24 3CGLC24 3CGMC30 3CGLC30	4 Rear Floor D-Rings
4CGMC24 4CGLC24 4CGMC30 4CGLC30	5 Rear Floor D-Rings
6CGMC24 6CGLC24 5CGMC30 5CGLC30	6 Rear Floor D-Rings

FIGURE 18: Standard Seismic Regions Field Installed D-Rings

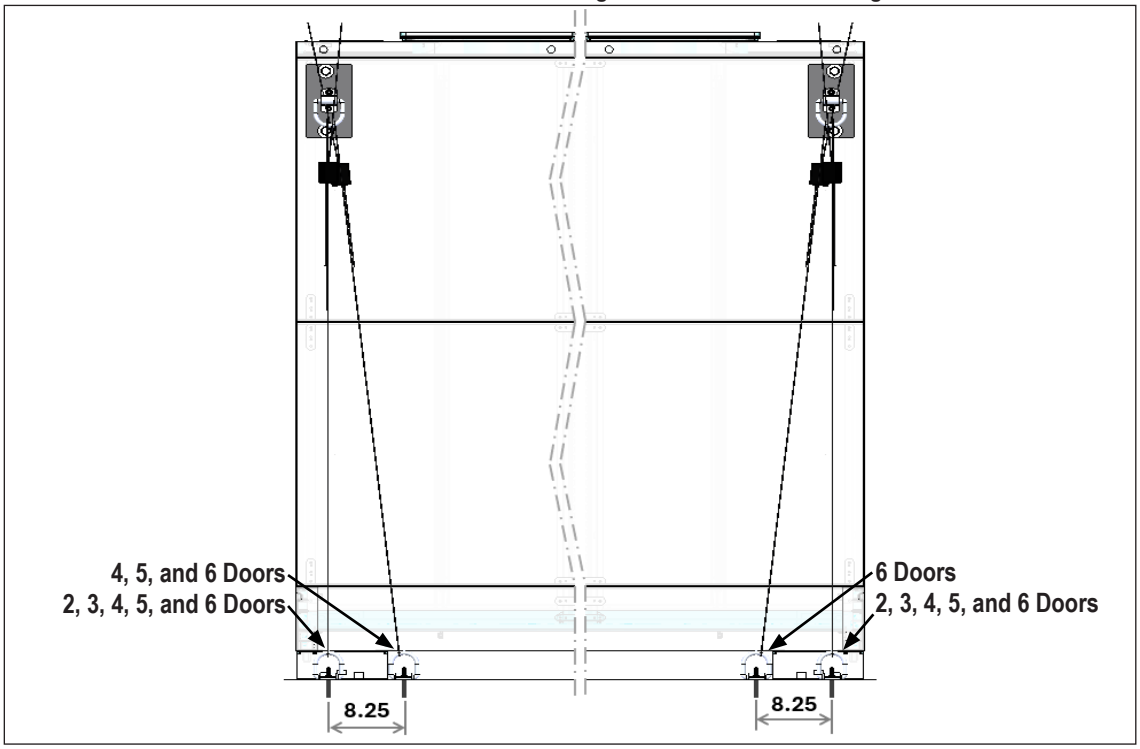

TABLE 4: Standard Seismic Layout Anchors	
Case Model	**Rear Floor D-Rings**
2CGMC24 2CGLC24 2CGMC30 2CGLC30 3CGMC24 3CGLC24 3CGMC30 3CGLC30	2 Rear Floor D-Rings
4CGMC24 4CGLC24 4CGMC30 4CGLC30 5CGMC30 5CGLC30	3 Rear Floor D-Rings
6CGMC24 6CGLC24	4 Rear Floor D-Rings

ZERO ZONE, INC. • 800-247-4496 • ZERO-ZONE.COM
© 2026 Zero Zone, Inc. All Rights Reserved. • NOV 2026

66-0187 REV B

SEISMIC BACK-TO-BACK CASE LINEUP

FIGURE 19: 2-Door Guardian Rear D-Rings

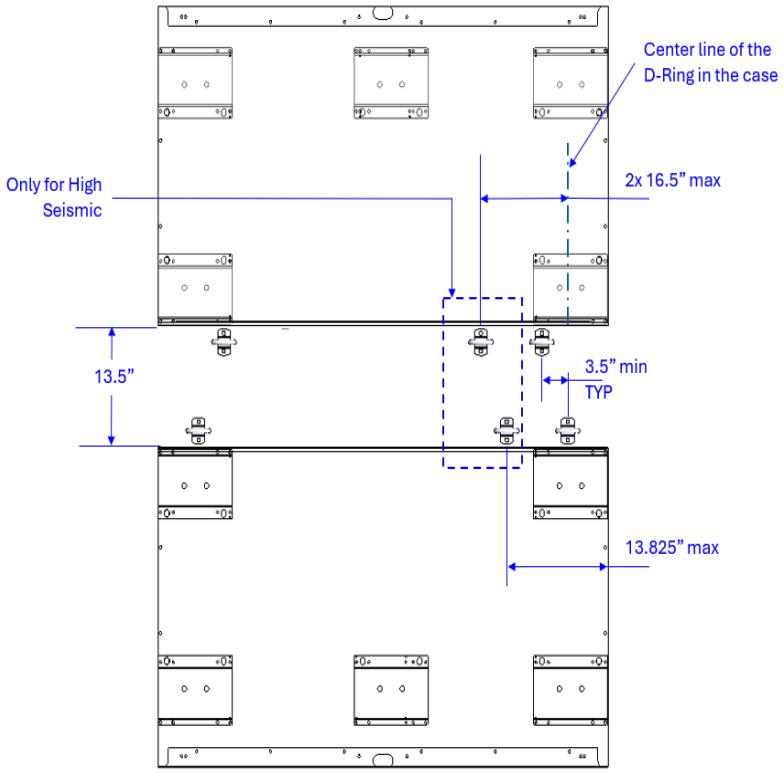

FIGURE 20: 3-Door Guardian Rear D-Rings

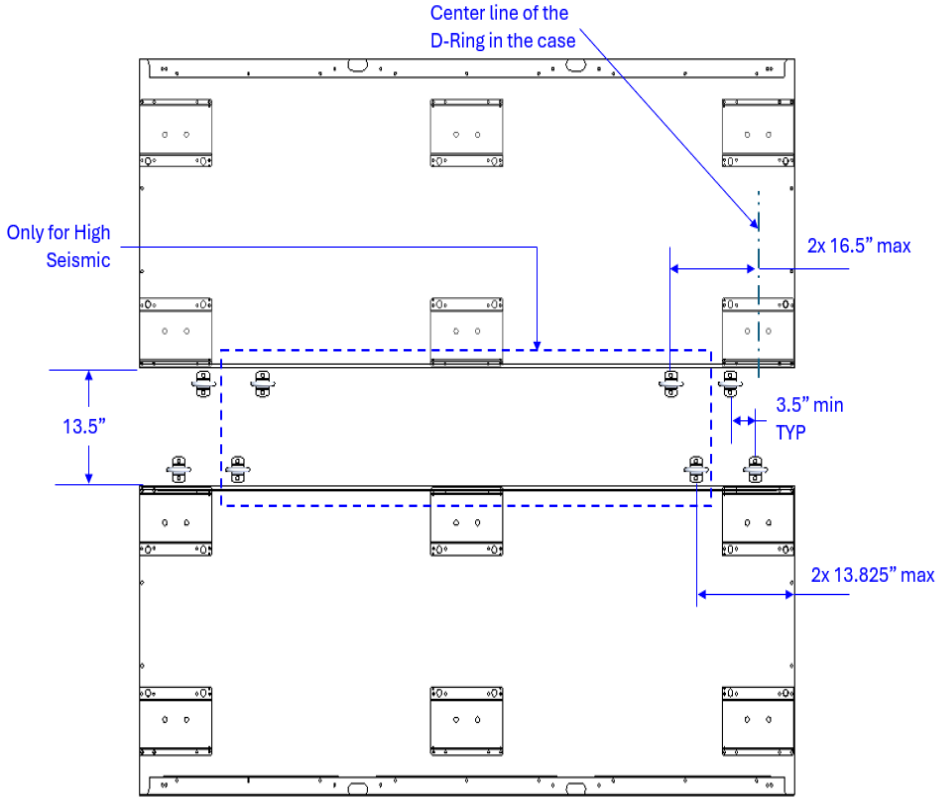

ZERO ZONE, INC. • 800-247-4496 • ZERO-ZONE.COM
© 2026 Zero Zone, Inc. All Rights Reserved. • NOV 2026

SEISMIC BACK-TO-BACK CASE LINEUP

FIGURE 21: 4-Door Guardian Rear D-Rings

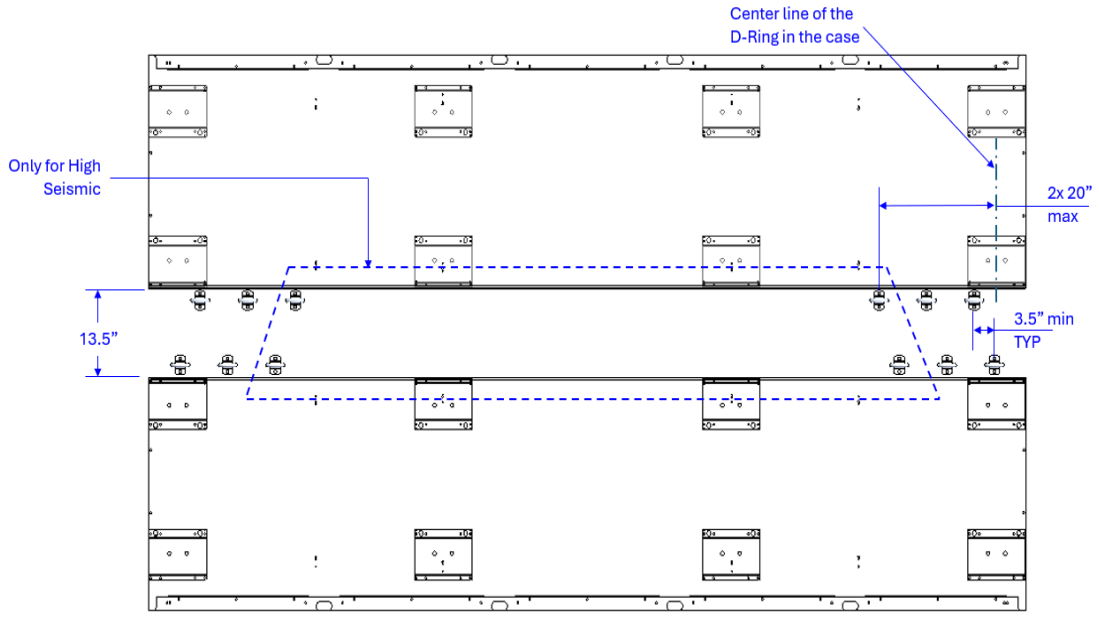

FIGURE 22: 3-Door & 4-Door Guardian Rear D-Rings

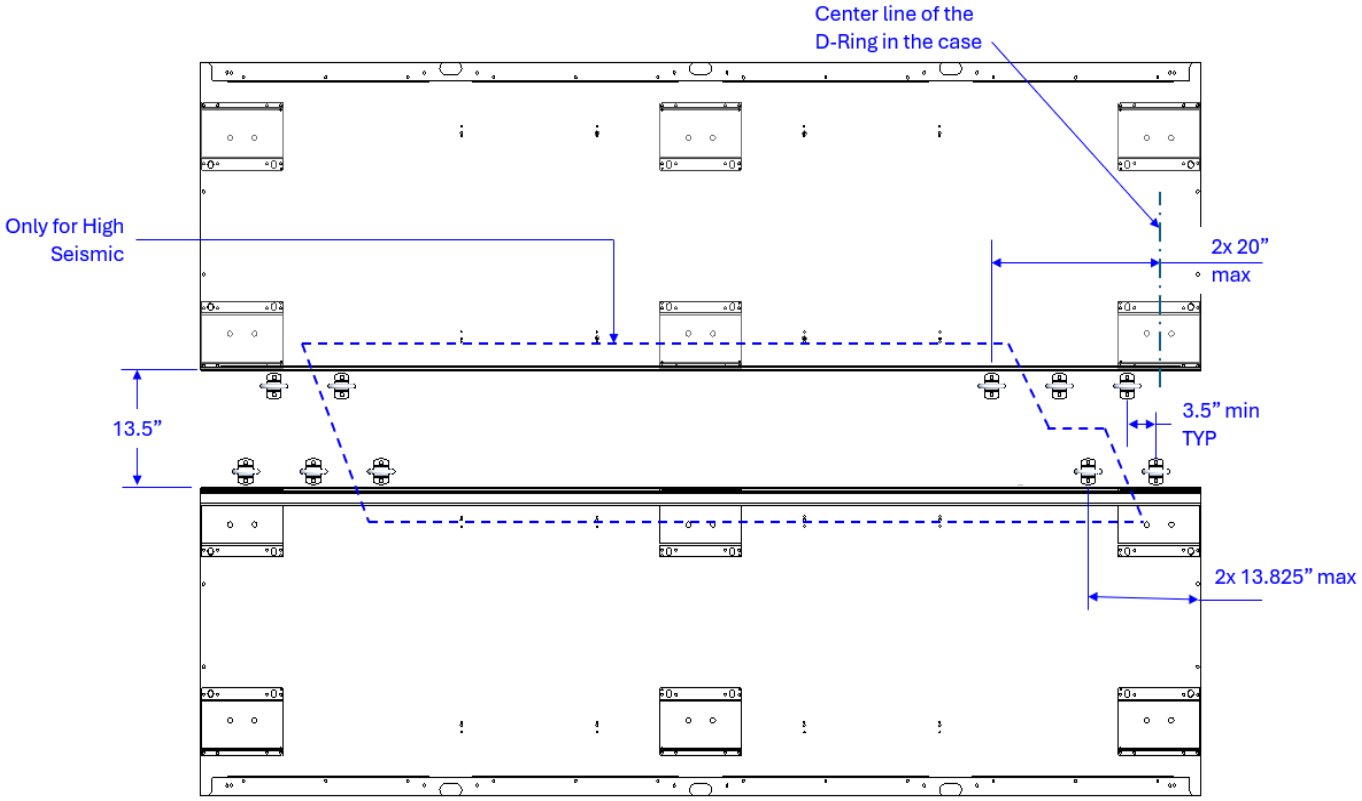

ZERO ZONE, INC. • 800-247-4496 • ZERO-ZONE.COM
© 2026 Zero Zone, Inc. All Rights Reserved. • NOV 2026

INSTALLATION FOR SEISMIC EXPANSION BASES

Installation for Seismic Expansion Bases

Note: These instructions apply to assembly of the Seismic Expansion bases. Installation of the Front Seismic Bracket shall be performed on the Seismic Expansion Bases, and Wire Rope anchoring follows the same procedure used for standard case installations.

1. Determine the required seismic anchors using **Table 5**.
2. Remove the spacers in the three corners marked in **Figure 23**. Re-attach the fasteners firmly to the display case. Attach the supplied self-tapping fastener included with the seismic kit (**Figure 23**).
3. Place the Seismic Expansion Base beneath the installed base, ensuring it is oriented flush and aligned at the right end (**See Figure 25**, **Figure 26**, and **Figure 27**).
4. Insert the hex bolt through the washers and aligned mounting holes. Install the washers and hex nuts from the opposite side (**Figure 24**).
5. Cover the exposed threads on hex bolts with bolt thread plug (**Figure 24**).
6. Install the anchor brackets in accordance with the instructions provided in the section **"Installation for Standard Cases" on page 4**.

TABLE 5: Seismic Expansion Anchor Selection
Up to 7 1/2" Height

<table>
<tr><th rowspan="3">S_{DS}</th><th colspan="3">Elevated Base</th><th rowspan="3">S_{DS}</th></tr>
<tr><th colspan="2">24" Door Width</th><th>30" Door Width</th></tr>
<tr><th>2-Door, 3-Door, 4-Door, 6-Door</th><th>2-Door, 3-Door, 4-Door</th><th>5-Door</th></tr>
<tr><td>≤ 0.6</td><td colspan="3">No Anchors Required</td><td>≤ 0.6</td></tr>
<tr><td>≤ 0.7</td><td colspan="3" rowspan="7">Standard Anchor Layout (any slab thickness)</td><td>≤ 0.7</td></tr>
<tr><td>≤ 0.8</td><td>≤ 0.8</td></tr>
<tr><td>≤ 0.9</td><td>≤ 0.9</td></tr>
<tr><td>≤ 1.0</td><td>≤ 1.0</td></tr>
<tr><td>≤ 1.1</td><td>≤ 1.1</td></tr>
<tr><td>≤ 1.2</td><td>≤ 1.2</td></tr>
<tr><td>≤ 1.3</td><td>≤ 1.3</td></tr>
<tr><td>≤ 1.4</td><td rowspan="3">Standard Anchor Layout (any slab thickness)</td><td colspan="2" rowspan="3">5" Min Slab w/ Standard Anchor Layout, Otherwise High Seismic Anchor Layout</td><td>≤ 1.4</td></tr>
<tr><td>≤ 1.5</td><td>≤ 1.5</td></tr>
<tr><td>≤ 1.6</td><td>≤ 1.6</td></tr>
<tr><td>≤ 1.7</td><td rowspan="3">5" Min Slab w/ Standard Anchor Layout</td><td colspan="2" rowspan="4">High Seismic Anchor Layout (any slab thickness)</td><td>≤ 1.7</td></tr>
<tr><td>≤ 1.8</td><td>≤ 1.8</td></tr>
<tr><td>≤ 1.9</td><td>≤ 1.9</td></tr>
<tr><td>≤ 2.0</td><td rowspan="4">Site Specific Enginering Required</td><td>≤ 2.0</td></tr>
<tr><td>≤ 2.1</td><td>≤ 2.1</td></tr>
<tr><td>≤ 2.2</td><td>≤ 2.2</td></tr>
<tr><td>≤ 2.3</td><td rowspan="2">High Seismic Anchor Layout (any slab thickness)</td><td rowspan="2">Site Specific Enginering Required</td><td>≤ 2.3</td></tr>
<tr><td>≤ 2.4</td><td>≤ 2.4</td></tr>
<tr><td>> 2.4</td><td colspan="3">Site Specific Enginering Required</td><td>> 2.4</td></tr>
</table>

ZERO ZONE, INC. • 800-247-4496 • ZERO-ZONE.COM
© 2026 Zero Zone, Inc. All Rights Reserved. • NOV 2026

66-0187 REV B

INSTALLATION FOR SEISMIC EXPANSION BASES

FIGURE 23: Spacer Removal

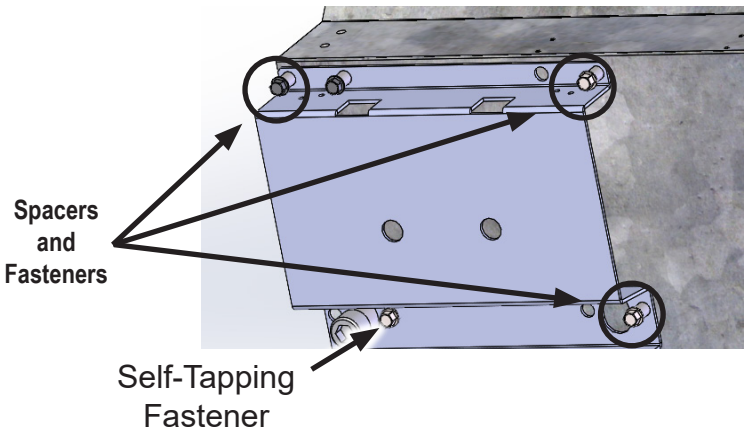

FIGURE 24: Expansion Base Assembly

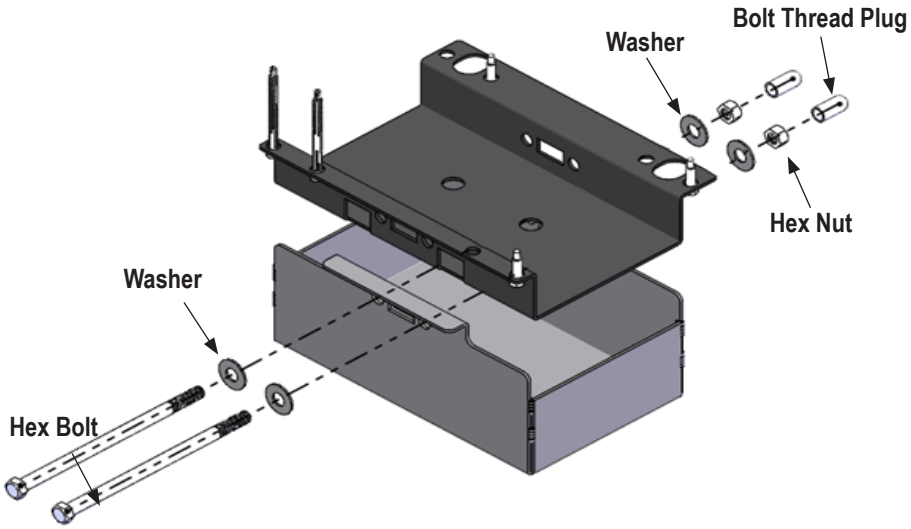

FIGURE 25: Expansion Base Assembly 2-Door
View from Front of Case
The circled bases are the seismic expansion bases

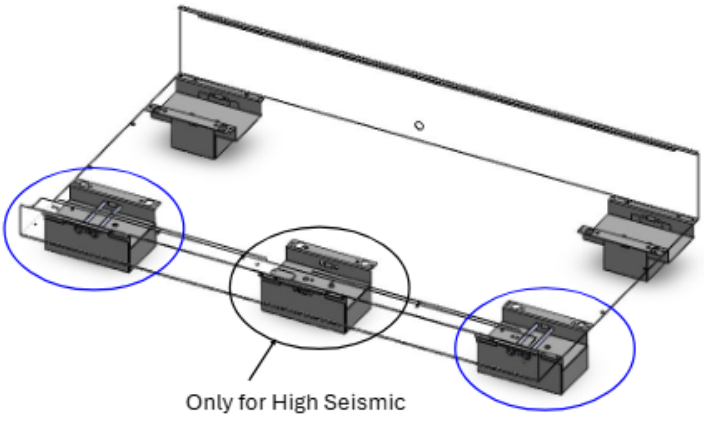

© 2026 Zero Zone, Inc. All Rights Reserved. • NOV 2026

INSTALLATION FOR SEISMIC EXPANSION BASES

FIGURE 26: Expansion Base Assembly 3- and 4-Door
View from Front of Case
The circled bases are the seismic expansion bases

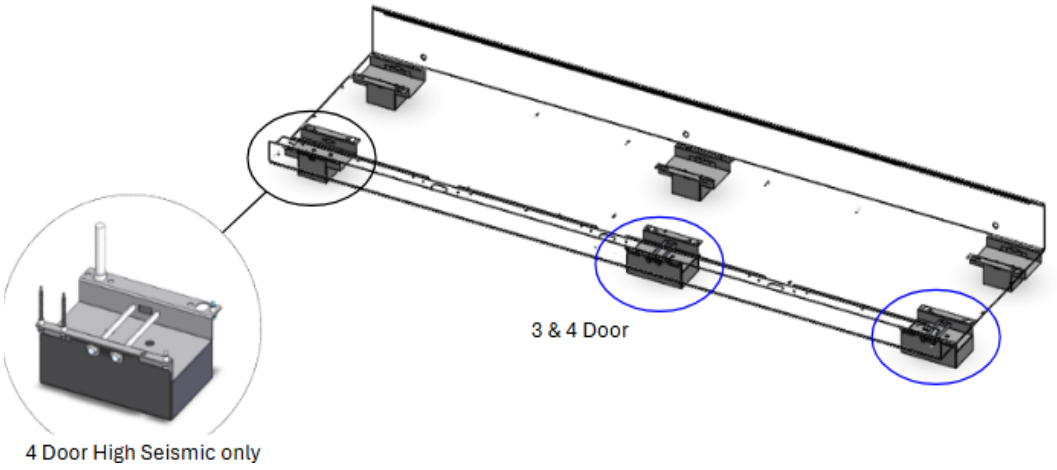

FIGURE 27: Expansion Base Assembly 5- and 6-Door
View from Front of Case
The circled bases are the seismic expansion bases

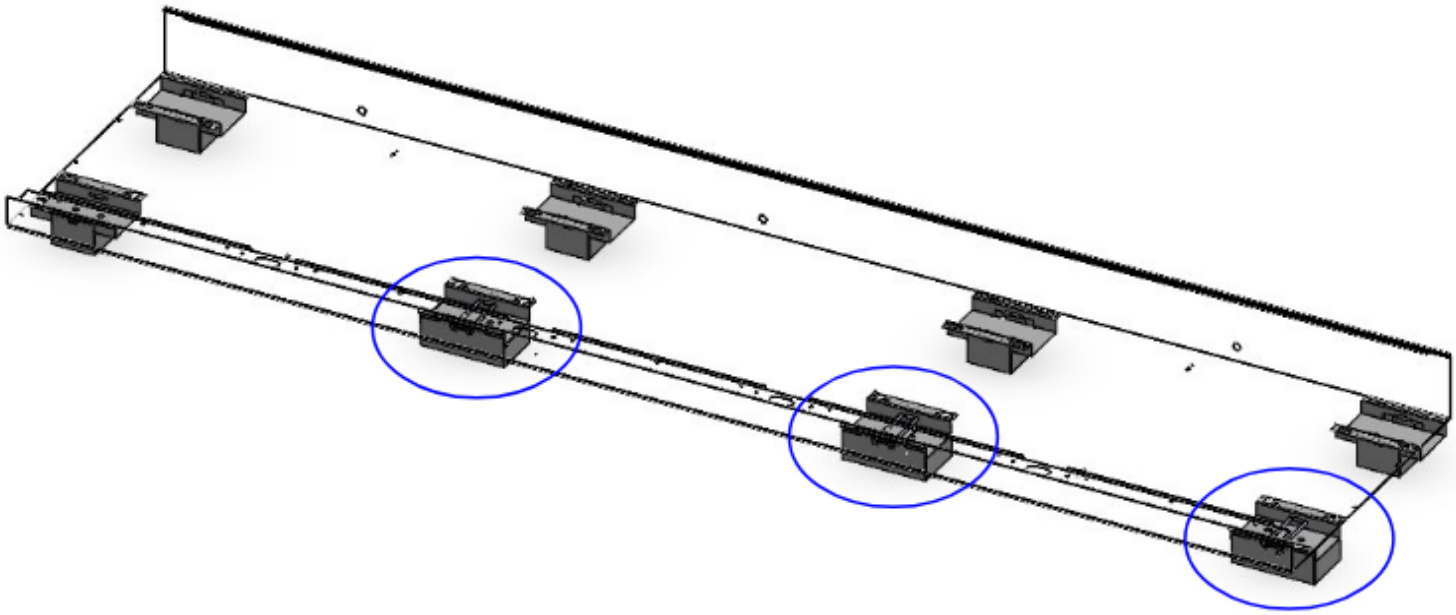

ZERO ZONE, INC. • 800-247-4496 • ZERO-ZONE.COM
© 2026 Zero Zone, Inc. All Rights Reserved. • NOV 2026
66-0187 REV B